OLYMPUS®

FlexoFORM™ Pipe Elbow Inspection Solution

- 100% elbow coverage
- Intuitive 2D C-scan imaging
- High-resolution data (1 mm × 1 mm)
- Fast elbow wall thickness measurement

Olympus offers rental equipment in the US.
Call us 24/7 at (281) 922-9300 for more information.

www.olympus-ims.com/scanners

Olympus is a registered trademark, and FlexoFORM is a trademark of Olympus Corporation.

MAY 2019 / VOL. 22 / NO. 2

Inspection Trends

THE MAGAZINE FOR MATERIALS INSPECTION AND TESTING PERSONNEL

American Welding Society®
CELEBRATING 100 YEARS
SINCE 1919

- NDE School Profiles
- Applications of Symbols for Brazing
- Welding Inspection Software Programs

PUBLISHED BY THE AMERICAN WELDING SOCIETY TO ADVANCE THE SCIENCE, TECHNOLOGY, AND APPLICATION OF WELDING AND ALLIED JOINING AND CUTTING PROCESSES WORLDWIDE, INCLUDING BRAZING, SOLDERING, AND THERMAL SPRAYING

American Welding Society®

CELEBRATING 100 YEARS
SINCE 1919

Upcoming Industry Conferences

Experience informative presentations, interactive panels, and immersive round table discussions directly related to your welding or welding-related operation. American Welding Society Conferences assemble industry experts in welding research & development, manufacturing and applications, who deliver a wealth of industry trends and actionable content.

AUG 29–30 2019

WELDING INDUSTRY SUMMIT

The Woodlands Resort | The Woodlands, TX

Drill deeper into welding operations, learn the best way to convert welding plans into successful projects and discover how more value can be brought to your welding operations.

For more information, visit *aws.org/ws2019*

SEPT 17–19 2019

SHIPBUILDING AND ALUMINUM CONFERENCE

Intercontinental Hotels & Resorts | New Orleans, LA

When it comes to welding technologies, the Shipbuilding and Aluminum industries share many of the same issues and experiences. This year, to support this synergistic relationship, these two events are being held concurrently in the same location. Attendees have the option of registering for one or both conferences.

For more information, visit *aws.org/shipbuilding2019*

SEPT 24–26 2019

AEROSPACE JOINING CONFERENCE

Hyatt Regency | Columbus, OH

In partnership with The Ohio State University, this 3-day seminar will focus on advanced welding and brazing, adaptive manufacturing, single crystal repair and advanced repair technologies for the aerospace and IGT engine industries.

For more information, visit *aws.org/aerospace19*

JAN 21–23 2020

PRESENTED BY

2020 INSPECTION CONFERENCE

The Only Inspection Conference in the Industry *Created by Inspectors for Inspectors*

Hyatt Regency Houston | Houston, TX

EXAMINING WAYS TO IMPROVE THE INSPECTIONS INDUSTRY

Be among the first to attend the inaugural Inspection Conference, where experts from the American Welding Society (AWS), American Institute of Steel Construction (AISC), The American Society for Nondestructive Testing (ASNT), and NACE International (The Corrosion Society), join forces on a comprehensive array of topics. Discuss subjects common to inspectors in corrosion engineering, nondestructive testing, steel construction and welding. Learn tips, technology and resources to improve the quality of your plans, drawings and documentation, visual inspections, procedures and testing processes.

For more information, visit *aws.org/inspections2020*

MAR 15–18 2020

INTERNATIONAL BRAZING AND SOLDERING CONFERENCE

The Curtis Doubletree | Denver, CO

The premier event for the brazing and soldering community providing professionals, scientists and engineers a unique networking and idea-exchange forum. This conference provides cutting-edge education and technical programming, peer-networking and a full exhibit program, showcasing the latest trends, products, processes and techniques available in the industry.

For more information, visit *aws.org/brazingcon2020*

May 2019 / Vol. 22 / No. 2

Inspection Trends

THE MAGAZINE FOR MATERIALS INSPECTIONS AND TESTING PERSONNEL

Cover photo: Weber State University Student Tyler Stitt analyzes a test film on a radiographic examination reader. (Photo by Sam Sievert.)

INSPECTION TRENDS (ISSN 1523-7168) is published quarterly by the American Welding Society. Editorial and advertising offices are located at 8669 NW 36 St., #130, Miami, FL 33166; telephone (305) 443-9353. Printed by R. R. Donnelley & Sons Co., Senatobia, Miss. Subscriptions $30.00 per year for noncertified, nonmembers in the United States and its possessions; $50.00 per year in foreign countries; $20.00 per year for noncertified members and students; $10.00 single issue for nonmembers; and $7.00 single issue for members. American Welding Society is located at 8669 NW 36 St., #130, Miami, FL 33166; telephone (305) 443-9353. Periodicals postage paid in Miami, Fla., and additional mailing offices.

POSTMASTER: Send address changes to Inspection Trends c/o American Welding Society, 8669 NW 36 St., #130, Miami, FL 33166.

Readers of *Inspection Trends* may make copies of articles for personal, archival, educational, or research purposes, and which are not for sale or resale. Permission is granted to quote from articles, provided customary acknowledgment of authors and sources is made. Starred (*) items excluded from copyright.

AWS MISSION STATEMENT

The mission of the American Welding Society is to advance the science, technology, and application of welding and allied joining processes worldwide, including brazing, soldering, and thermal spraying.

AWS DIVERSITY AND INCLUSION STATEMENT

AWS values diversity, advocates equitable and inclusive practices, and engages its members and stakeholders in establishing a culture in the welding community that welcomes, learns from, and celebrates differences among people.

AWS recognizes that a commitment to diversity, equity, and inclusion is essential to achieving excellence for the Association, its members, and employees.

Features

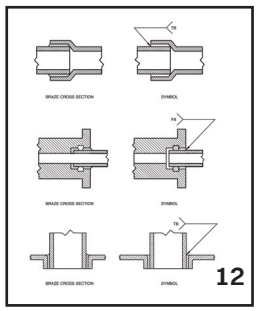

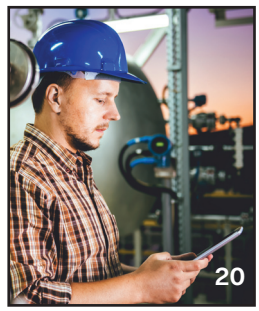

Applications of Symbols Used for Brazing
by J. P. Christein and Richard D. Campbell / The tenth in a series of articles about improving the communication of welding symbols, this article addresses applications of symbols for brazing / **12**

Nondestructive Examination at Weber State University
by Jeffry Strahan / How the school's Manufacturing, Engineering and Technology program incorporates welding inspection classes / **16**

Tips for Selecting a Welding Inspection and Document Management Software Program
by Lance C. Becker / Establishing objectives and criteria to choose the best software / **20**

Departments

Editorial....4
News Bulletins....6
Print and Product Showcase....8
The Answer Is....10
NDE School Profiles....24
Technology Notes....32
Mark Your Calendar....34
Certification Schedule....36
Classifieds....38
Advertiser Index....38

Editorial

Welders Make Good Inspectors

By Chris Emerick

There's a common saying in the steel fabrication industry: Welders who cannot weld become inspectors. While there may be some truth in that statement, it has been my experience that some welding know-how enhances an inspector's ability to evaluate welds. This is not to say that an inspector cannot do the job of inspecting well without such know-how. Still, it is beneficial for an inspector to have a grasp of the practice (what I will call "practical welding knowledge") that exceeds what may be obtained merely by reading books about welding.

The American Welding Society (AWS) already requires a minimum amount of work experience in the industry prior to becoming an AWS Certified Welding Inspector (CWI). It is beneficial for inspectors if some of that required experience includes practical welding knowledge. I am suggesting that specific experience "behind the shield" improves an inspector's ability to evaluate welds and provide feedback to welding personnel for improvement.

One of the benefits of practical welding knowledge is the ability to understand how welds are produced in different positions using various welding processes on many material types for numerous applications. This also provides important information about how discontinuities and defects are produced in each unique material, process, and position combination. This information is useful for those inspectors who are often asked how certain discontinuities are formed and for tips on how to avoid them. For example, practical knowledge of welding enables the inspector to appreciate how increasing the tensile strength of shielded metal arc welding (SMAW) electrodes for carbon steels (e.g., moving from a 70- to a 100-ksi type) results in a decrease in the viscosity of the molten weld pool, yielding a susceptibility to overlap and fusion-type discontinuities especially in the horizontal position. One possible corrective: Increase the travel speed. Or, consider another example for the same welding process but a different material type: Slag produced when welding stainless steels with SMAW tends to be rather stubborn, particularly in the root and second layers of multiples-pass groove welds, and so fresh batteries for a good flashlight and a reliable grinding wheel are as important as a correct amperage setting and proper travel and work angles to avoid inclusion-type discontinuities.

Practical welding knowledge is also important for discerning potential root causes of defects specific to the welding process regardless of material type. For example, the gas metal arc welding process typically requires greater welder technical efficiency because it uses only one shielding type (i.e., inert gas) compared to flux cored arc welding, which adds an internal flux to the external shielding gas to produce a more stable arc and a generally lower susceptibility to porosity. An inspector who has welded with each process has an advantage over the one who has not.

While I'll stop just short of saying welding inspectors must have some practical welding knowledge, it is clear that a diversity of work experience, especially including practical welding knowledge, yields an appreciably well-rounded inspector capable of understanding welding from more than a theoretical point of view.

Chris Emerick, PhD, is an AWS CWI and CWE, as well as weld training manager, Steel America Inc., Norfolk, Va.

Publisher
Mary Ruth Johnsen, *mjohnsen@aws.org*

Editorial

Editor
Carlos Guzman, *cguzman@aws.org*

Senior Editor
Cindy Weihl, *cweihl@aws.org*

Features Editor
Kristin Campbell, *kcampbell@aws.org*

Associate Editor
Katie Pacheco, *kpacheco@aws.org*

Assistant Editor
Roline Pascal, *rpascal@aws.org*

Design and Production

Production Manager
Zaida Chavez, *zaida@aws.org*

Assistant Production Manager
Brenda Flores, *bflores@aws.org*

Manager of International Periodicals and Electronic Media
Carlos Guzman, *cguzman@aws.org*

Advertising

Media Sales Executives
Jeff Rhodes, *jeff.rhodes@mci-group.com*
Kim Daniele, *kim.daniele@mci-group.com*

Subscriptions Representative
Thomas Lira, *tlira@aws.org*

American Welding Society
8669 NW 36th St., #130
Miami, FL 33166-6672
(800/305) 443-9353

Copyright

Copyright © 2019 by American Welding Society in both printed and electronic formats. The Society is not responsible for any statement made or opinion expressed herein. Data and information developed by the authors of specific articles are for informational purposes only and are not intended for use without independent, substantiating investigation on the part of potential users.

American Welding Society®
CELEBRATING 100 YEARS
SINCE 1919

American Welding Society®
MEMBERSHIP
aws.org

Our Corporate Members Get MORE

Whether your organization has joined American Welding Society as a Supporting, Sustaining or Affiliate member, as a Distributor or Educational Institution, we are proud to support the companies and organizations that support us. Here are just some of the ways our AWS Corporate members experience **MORE**:

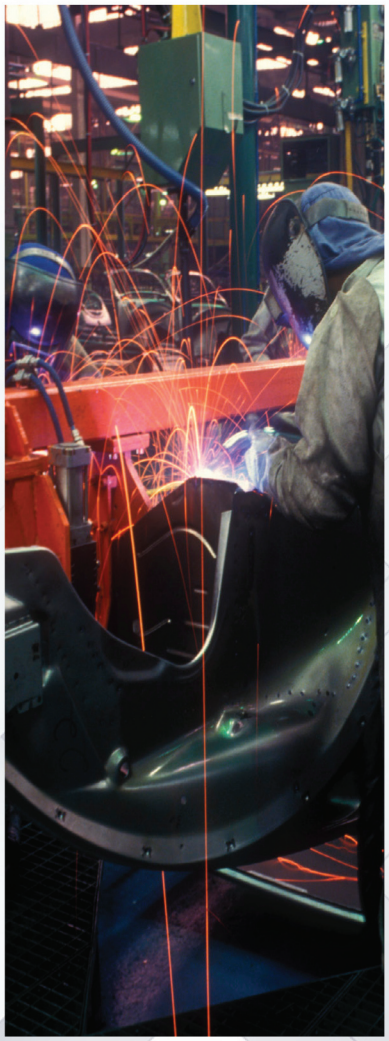

MORE ACCESS

- Membership for up to twenty (20) people (depending on membership level)
- Complimentary VIP passes to FABTECH for staff incentives or customer relations
- Exclusive usage of the AWS Corporate Member logo on your business and promotional materials
- Annual subscription for each member to the award-winning *Welding Journal* and *American Welder* (a special section of the *Welding Journal*)
- Company Listing on *AWS.org*

MORE PROFESSIONAL GROWTH

- Customized seminars and workshops for your organization
- Member-only networking opportunities at AWS-sponsored events
- Online AWS Standards eLibrary Access for your employees (depending on membership level)

MORE DISCOUNTS

- 25% off over 300 technical standards and publications offered at the AWS Bookstore
- Additional 5% discount off the already-reduced member registration price of any AWS conference
- Savings on certification programs and seminars offered through AWS
- Get discounted rates on insurance, travel, shipping, AWS logo merchandise and more

To review, renew or increase your membership benefits, contact American Welding Society

T: 800-443-9353, ext. 480. | info@aws.org | *aws.org/membership*

AWS Launches Centennial Celebration Web Page

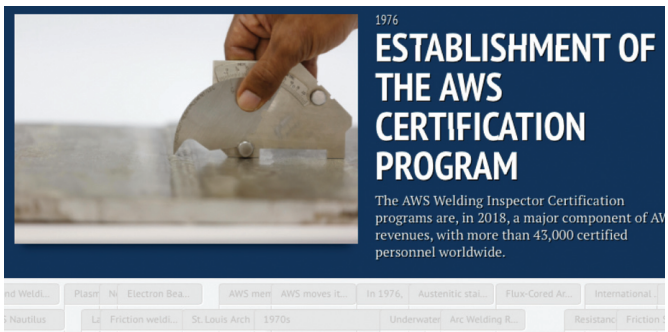

The interactive timeline on the new AWS 100th anniversary web page highlights significant advancements, such as the establishment of the AWS Certification Program in 1976.

As part of festivities this year for the American Welding Society's (AWS) 100th anniversary, a special web page has been created at *aws.org/about/page/aws-100*.

Under the headline titled "Honoring our Past, Embracing the Future," the following is stated:

"Our Centennial celebration really belongs to all the men and women who've been instrumental to the Society's growth. That's why we're asking all of you to join us throughout the year as we reflect on the proud heritage of service that we've built together and embrace the future ahead."

Additionally, the web page features 100 years of AWS history in an interactive timeline. "Take a short walk down memory lane with us as we celebrate key AWS milestones along with the many significant industry advancements leading up to our 100th birthday," is stated there. Users can navigate through numerous accomplishments, plus view photos, all in chronological order.

Another focus on the web page is a video where AWS Learning shows depictions of welding in popular culture.

As AWS marks its centennial in 2019, visit *aws.org/about/page/aws-100* for photos, videos, and more. Share photos and memorabilia as well on social media using #AWS100.

ESAB Asia Pacific Pte. Ltd. Visits and Donates to Indonesia AWS SENSE Program

On November 7, 2018, SMKN 2 Bandung received a visit from ESAB Asia Pacific Pte. Ltd. representatives from Indonesia. This visit was carried out in collaboration with PT. Asian Welding Specialist (PT. AWS) and SMKN 2 Bandung Vocational High School.

Pictured are ESAB and the Department of Education of West Java Province representatives, along with Dina Septriana, director of PT. AWS (center); Agung Sulistiono, PT. Esabindo Pratama-Indonesia; Principal of SMKN 2 Bandung Tatang Gunawan; welding instructors; teachers; and students.

During this visit, ESAB donated four new welding power sources with supplies and consumables to the AWS SENSE program at PT. AWS-SMKN 2 Bandung, where the program has been up and running for two years. In a symbolic gesture, the donation was handed to the principal, Tatang Gunawan, by Agung Sulistiono, sales manager of PT. Esabindo Pratama-Indonesia, ESAB. Teachers and students, along with Dina Septriana, director of PT. AWS, and representatives from the Department of Education of West Java Province witnessed the occasion.

— continued on page 23

NDT Seals, Inc.

Zac Sebren
Director

PO Box 52878 Houston, TX 77052-2878 USA
tel 713.222.7584 cell 281.995.7916 fax 713.222.9404
zac@ndtseals.com

Manufacturer of NDT Inspection Plugs and NDT Inspection Point Labels

ISO 9001:2015 Certified Quality Management System

TED IS YOUR ONE COMPLETE NDT SOURCE

Equipment • Accessories • Supplies
Service • Repair

Visit www.tedndt.com

- Digital X-Ray
- Computed Tomography
- Magnetic Particle
- Liquid Penetrant
- Ultrasonic
- Eddy Current
- Visual-Borescopes
- Residual Stress Analysis

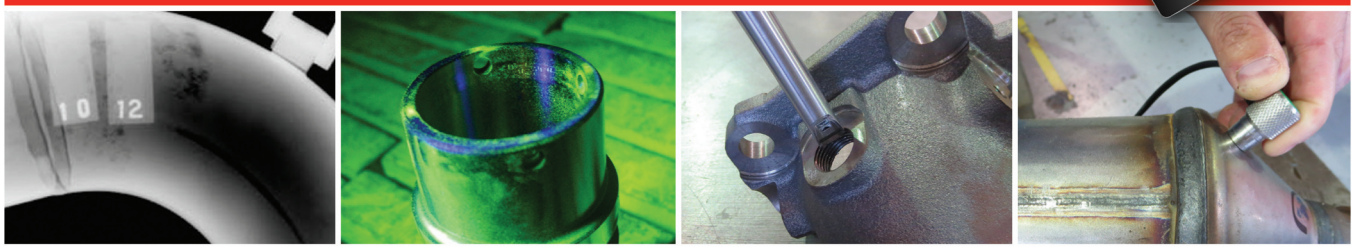

Test Equipment Distributors, LLC

One Complete NDT Source

Equipment • Accessories • Supplies
Service • Repair

Customer Care Center
800-962-1788

Corporate/Service
800-521-1730

AWS Releases 2019 *Winter/Spring Products and Services Catalog*

The American Welding Society's (AWS) 2019 *Winter/Spring Products and Services Catalog* covers publications, membership, professional and career development programs, expositions, academic resources, and more. The 104-page catalog highlights nondestructive examination guides such as B1.10M/B1.10:2016, *Guide for the Nondestructive Examination of Welds;* B5.5:2011, *Specification for the Qualification of Welding Educators;* CM:2000, *Certification Manual for Welding Inspectors;* A2.4:2012, *Standard Symbols for Welding, Brazing, and Nondestructive Examination*; and more. The catalog can be accessed at a*ws.org/2019catalog*.

American Welding Society
aws.org

Videoscope Provides Remote Quality Control Inspection

The TVS-35 series industrial videoscope offers remote visual inspection for aviation maintenance, casting and cavity inspection, diesel and gasoline engine repair, as well as locomotive and ship maintenance. The quality control instrument features a full 360-deg articulation using durable tungsten-braided sheathing that enables easy insertion and bending through complex environments. A mechanized joystick directly controls the camera articulation for smooth, accurate command of the articulating tip, with immediate response to the joystick inputs. Combined with a 120-deg field of view, this enables the camera tip to be steered through narrow bores, channels, and complex curves. The videoscopes have a built-in 3.5-in. monitor screen and high-intensity LED lights with six-step intensity control to suit multiple inspection conditions. Six models are offered with lengths from 40 to 197 in. and probe diameters of 2.8, 3.9, and 6 mm. Each unit is packed safely and securely in a foam-fitted carrying case and is equipped with a battery charger, USB micro SD card reader, and 16-GB SD card.

Titan Tool Supply Inc.
titantoolsupply.com

Piping Calibration Blocks Enable Inspection Circumferential Welds

A set of three extended range variable wall (ERVW) piping calibration blocks with side-drilled holes facilitate calibrations in the axial direction for examination of circumferential welds. The

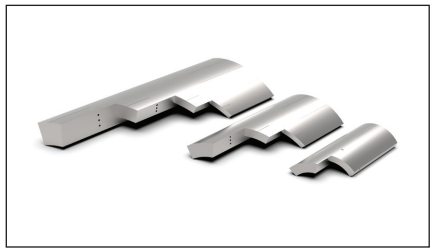

full set offers coverage from 3 to 5 in. (small), 6 to 10 in. (medium), and 3 to 20 in. (large) nominal pipe sizes. The set of blocks weighs 30 lb and ship in a durable Pelican-style case with custom-cut dense foam pockets, making them portable. With just three blocks, users can cover a range of pipe inspection sizes. The small covers 12 inspection sizes, the medium covers 29 sizes, and the large block covers 55 sizes. For added convenience, each step is also permanently engraved with the nominal thickness and pipe sizes (outer diameter/wall) covered. The calibration blocks were designed for phased array ultrasonic testing (UT); however, they also work with conventional UT equipment. Compound angles are cut into the end of each step with the aim of redirecting termination echoes, allowing for full distance amplitude correction/time-corrected gain calibrations without interfering reflections. Machine-engraved transducer positioning marks aid the inspector in optimal transducer placement, maximizing the signal from the side-drilled holes. The blocks can be made in any alloy. They are media-blasted on all surfaces to create a rough surface texture that is characteristic of real-world inspection conditions. Each block is also marked with a unique serial number and material type.

PH Tool Reference Standards / Holloway NDT & Engineering
phtool.com / hollowayndt.com

Hardness Testing Software Simplifies Quality Management

The upgraded DiaMet™ hardness testing software can integrate and transform Buehler and legacy Wilson

hardness testers to improve quality management using the software's database. Measurement results are automatically saved and test reports are easily generated, allowing users to improve work efficiency and reduce or eliminate manual data entries. With the use of digital imaging, the software measurement process provides more consistent test results between multiple operators. The test program or test job may can be categorized in folders; its filtering feature allows for easy recalling to ease any internal or external auditing process. The software will help move organizations toward Industry 4.0. The upgraded package includes a USB 3.0 digital camera, camera cable, and workstation.

Buehler Ltd.
buehler.com

Encoding System Minimizes the Number of Required Operators

The LATITUDE™ nonmechanized encoding system allows a single operator to perform an inspection by hand while producing a detailed digital record of the inspection at all times. The electronic control unit allows the operator to guide the system through the TOPAZ® user interface. The system enables an examiner to manually apply and manipulate nondestructive examination sensors, providing tactile feedback on surface condition, contact, and coupling that leads to improved signal-to-noise results. The manually applied sensor also allows the examiner to more efficiently discern and characterize component damage. Compact and portable, the encoding system features the following: a single battery-powered electronics box, which consists of a sealed fanless enclosure and is powered by two hot-swappable batteries that provide up to 10 h of usage; a lightweight receiver array collar for flat and curved surfaces; and a small transmitter attachment that contains multiple sensors for determining the axial and circumferential position, as well as the skew, of the fixture.

Zetec Inc.
zetec.com

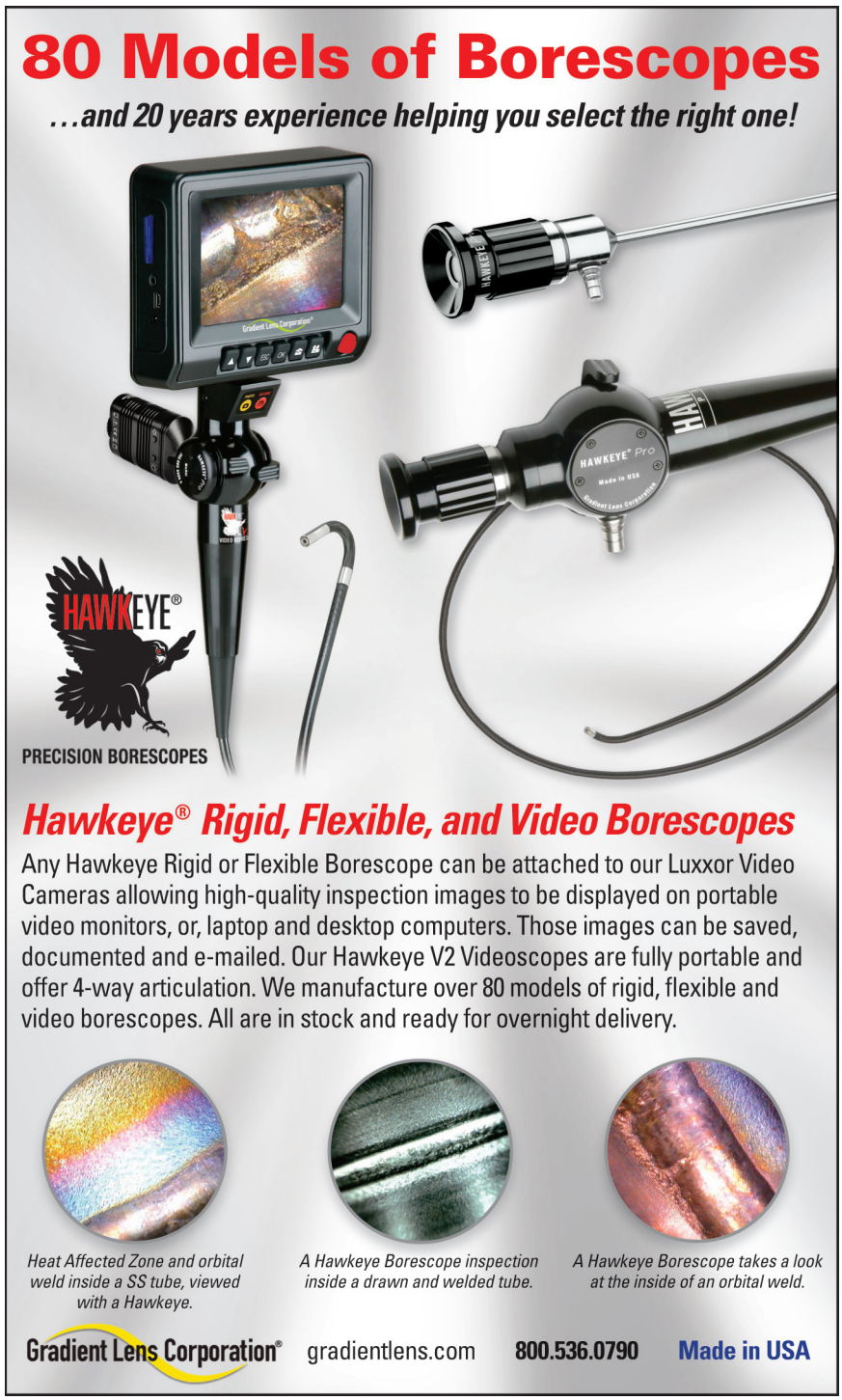

By A. Moore

Q: I have a question about something we were discussing during a coffee break the other day. One of the welders mentioned using crush wires to prevent cracking when making heavy welds. Exactly what is a crush wire, and how do they help prevent cracks?

A: Crush wires are pieces of soft annealed wire placed in the joint root to maintain a small root opening during fitup. Once welded, as the fillet weld cools, contraction in the transverse direction deforms (crushes) the soft wire and reduces the magnitude of the residual tensile stress in the through-thickness direction — Fig. 1.

Without the crush wires, the members would be in contact with each other. The residual stress developed as the fillet weld cools could be sufficient to cause a lamellar tear in the plane parallel to the rolled surface of the thick plate.

Reducing the residual stress in the transverse direction reduces the tendency of producing high tensile stress in the through-thickness direction. Reducing the tensile stress in the through-thickness direction reduces the probability of a lamellar tear in the horizontal member.

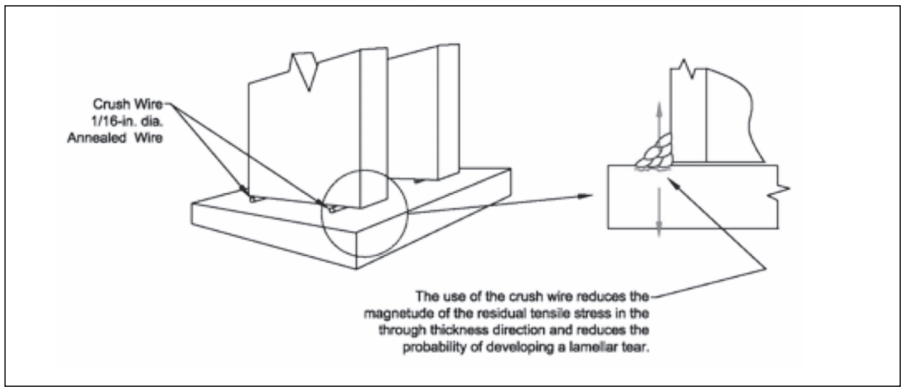

Fig. 1 — This illustration depicts the location of the crush wires under the flanges of the column shaft. As the large fillet welds cool and contract, the crush wires are deformed, minimizing the residual tensile stresses in the through-thickness direction. Reducing the residual tensile stress mitigates the probability of a lamellar tear in the base plate.

The Society is not responsible for any statements made or opinion expressed herein. Data and information developed by the authors are for specific informational purposes only and are not intended for use without independent, substantiating investigation on the part of potential users.

ALBERT J. MOORE JR. (amoore999@comcast.net) *is vice president, Marion Testing & Inspection, Canton, Conn. He is an AWS Senior Certified Welding Inspector and an ASNT ACCP NDT Level III. He is also a member of the AWS Certification Committee and the Committee on Methods of Inspection of Welds.*

10% Discount Code: IT519 for first order of an online course(s)

"NDT Classroom really stood out to us as something we could truly benefit from ... you won't be disappointed in this program"
BRENT BOLING, Owner - Arc-Tech Welding Inspections

Chuck Hellier's NDTClassroom | AWS American Welding Society

All Major NDT Methods Offered (716) 812-8165 | www.ndtclassroom.com/aws

AWS American Welding Society

Reprints

Custom reprints of Welding Journal articles, in quantities of 100 or more, may be purchased from Jill Kaletha, national account executive, Mossberg & Co. at (800) 428-3340, ext. 149, or (574) 289-9253, ext. 149.

You can also send an email to jkaletha@mossbergco.com

American Welding Society®
MEMBERSHIP
aws.org

3 WAYS TO MAXIMIZE YOUR MEMBERSHIP

1 CONNECT WITH OTHERS

- **MemberNetwork AWS.org** – Access our exclusive, members-only online network and enter an active online community of AWS members who share ideas, discuss technical concerns, and get input and support on welding-related issues
- **Become actively involved in your local AWS Section activities**
- Attend AWS-Sponsored events such as FABTECH USA, Mexico or Canada; Welding Summit, and others

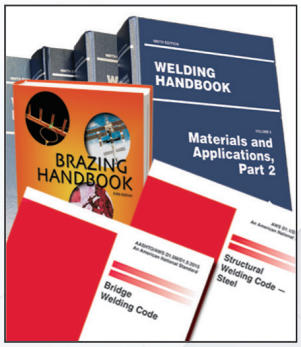

2 ENJOY NUMEROUS DISCOUNTS

- Receive discounts on technical standards, publications, certifications, education offerings and subscriptions
- Enjoy reduced admission to AWS-sponsored events and conferences (FABTECH, etc.)
- Get discounted rates on insurance, travel, shipping, AWS logo merchandise and more

3 ENHANCE YOUR CAREER

- **Increase your welding knowledge through AWS online seminars**, including code clinics, destructive and non-destructive testing, metallurgy, economics, fabrication math and more.
- **Get certified by the organization that sets the standards** including Certified Welder, Welding Inspector, Welding Educator, Engineer, Sales Representative and more.
- Stay informed with complimentary subscriptions to *Welding Journal* (monthly), *American Welder* (quarterly) and *Welding Marketplace* (twice annually)

There's no time like the present to start taking full advantage of your membership!

Spread the news and invite others to join!

aws.org/membership

By J. P. Christein and Richard D. Campbell

Applications of Symbols Used for Brazing

Their use and proper applications are described

This is the tenth in a series of articles about improving the communication of welding symbols. The previous nine issues of *Inspection Trends* have addressed groove weld symbols; fillet weld symbols; spot, seam, and projection weld symbols; plug and slot weld symbols; edge weld symbols; stud, back, backing, and surfacing weld symbols; supplementary welding symbols; welding symbols to support T- and corner joints as well as seal welds; and symbols for nondestructive examination. This article addresses applications of symbols for brazing.

Welding symbols provide a system for placing welding information on drawings, procedures, and data sheets for the purpose of relaying information to fitters, welders, fabricators, and inspectors. Welding symbols quickly indicate the type of weld joint needed to satisfy the requirements for the intended service conditions.

There are a number of standards throughout the world that relate to welding symbols; however, AWS A2.4, *Standard Symbols for Welding, Brazing, and Nondestructive Examination*, is the standard most widely used. The data and definitions in this article are referenced from AWS A2.4:2012 and AWS A3.0M/A3.0:2010, *Standard Welding Terms and Definitions*.

While welding symbols are widely applied on structural, civil, and architectural drawings and blueprints, symbols for brazing are more limited in their application. Regardless, they are powerful and have great potential for users.

Basics of Symbols for Brazing

In the AWS system, the same basic principles of welding symbols apply to symbols for brazing applications.

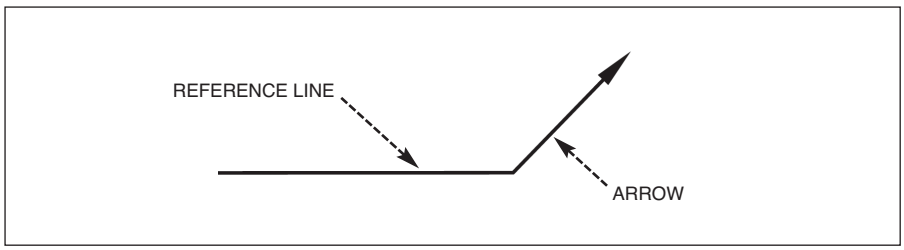

Fig. 1 — Reference line and arrow.

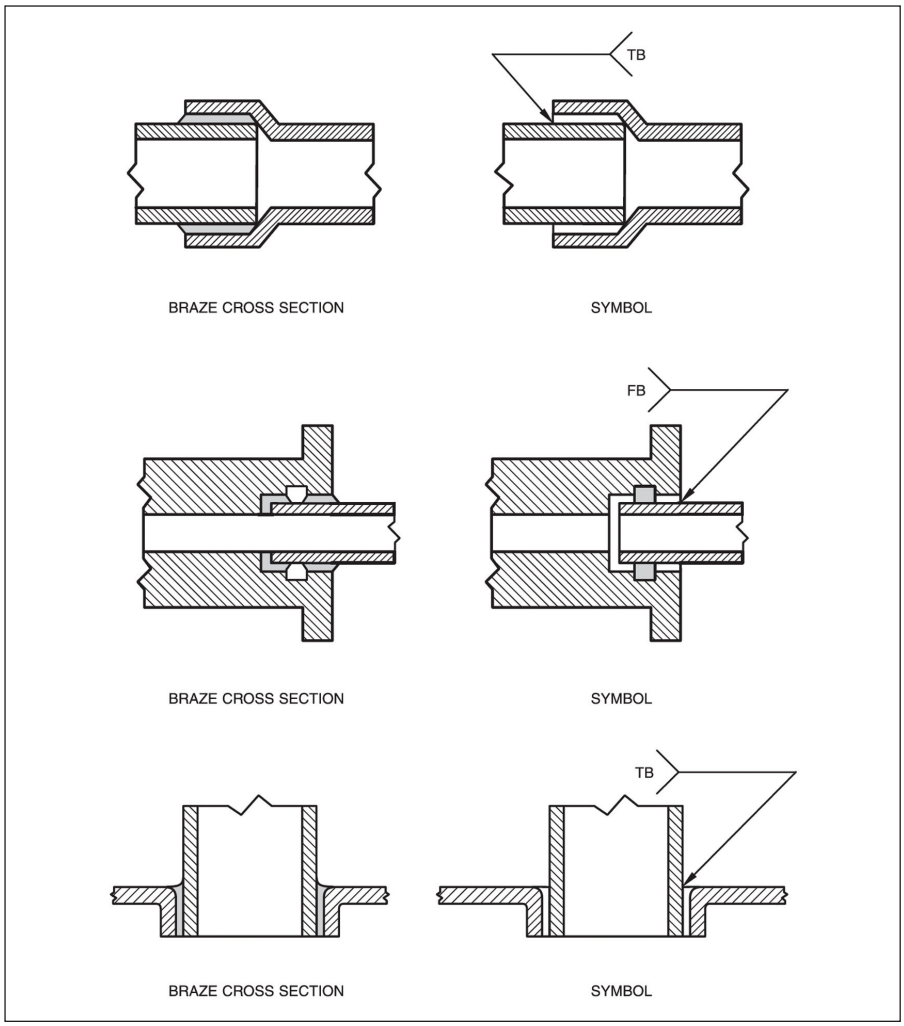

Fig. 2 — Application of symbols for brazing illustrating the use of brazing process identified in the tail. Note: The shaded area in the braze cross section denotes brazing filler metal.

Some elements, however, have slightly different meanings. Even though a symbol for brazing may consist of several elements, only the reference line and an arrow are required elements — Fig. 1. The reference line is always drawn horizontally. The arrow connects the reference line to the joint to be brazed. The side of the member to which the arrow points is considered the *arrow side,* and the side opposite the arrow side of the part is considered the *other side*.

Symbols used for brazing also include symbols used for braze welding. AWS A3.0 defines brazing as a group of joining processes in which the workpiece(s) and brazing filler metal are heated to the brazing temperature to form a brazed joint. The brazing filler metal has a liquidus above 450°C [840°F] and below the solidus of the base metal. The brazing filler metal is distributed and retained between the closely fitted faying surfaces of the joint by capillary action. Braze welding is slightly different, and AWS A3.0 defines this as a joining process in which the brazing filler metal is distributed in the joint without capillary action. A braze fillet is an example of a braze weld because capillary action is not involved.

Symbols Used for Brazing

The welding symbol for brazing was established in AWS A2.0:1947, *Standard Welding Symbols and Rules for Their Use*. The method was to use the base welding symbol (reference line and arrow) and add the brazing process to the tail of this welding symbol. In the 1979 edition of AWS A2.4, a section on brazed joints was introduced. If no special joint preparation other than cleaning is required, the brazing symbol would continue to be the reference line and arrow with the designated brazing process in the tail. What was new was the application of conventional welding symbols to brazed joints. This allowed a lot more detailed information to be provided. Also introduced in AWS A2.4:1979 was the scarf symbol, which is unique to brazing.

General

Symbols used for conventional welding may also be used for brazing or braze welding, where suitable. Al-

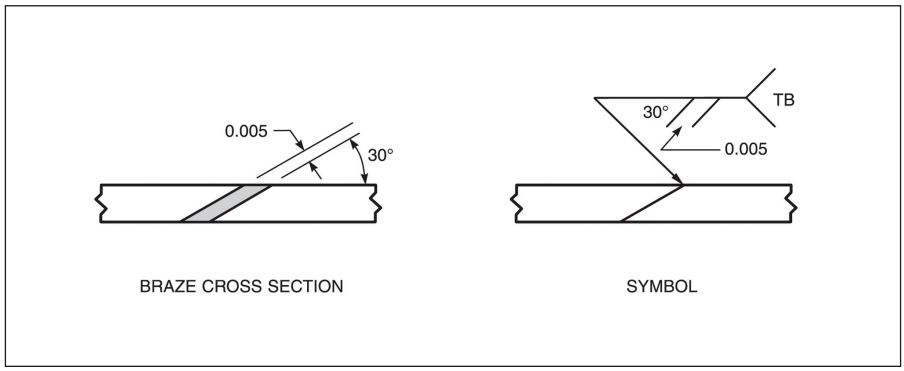

Fig. 3 — Specification of braze joint angle and clearance.

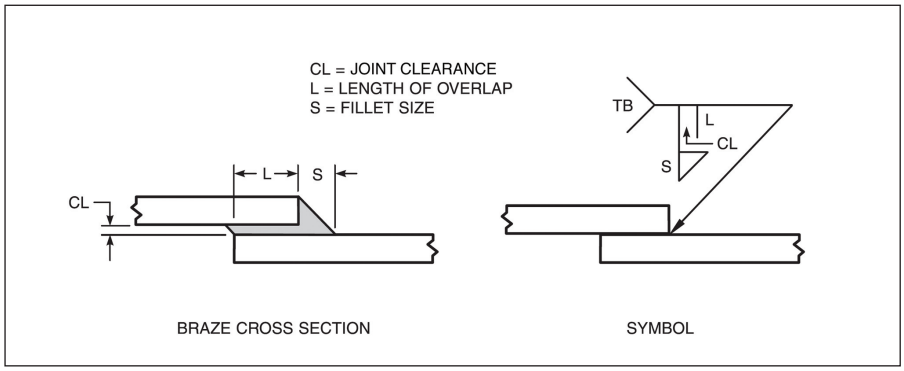

Fig. 4 — Specification of joint clearance, joint overlap, and braze fillet size.

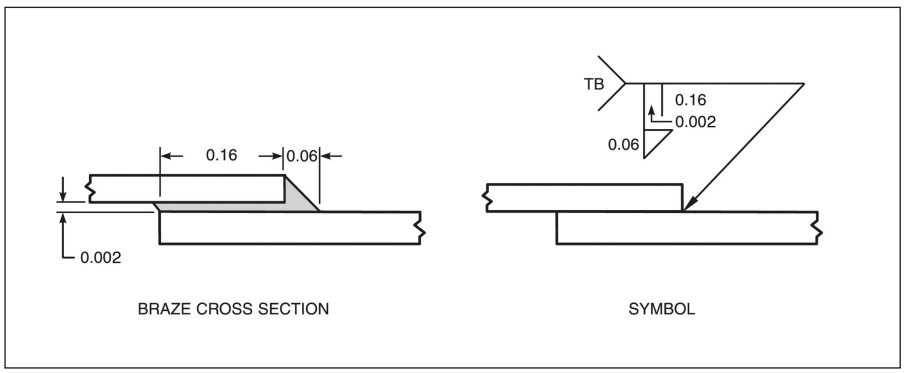

Fig. 5 — Specification of joint clearance, joint overlap, and braze fillet size.

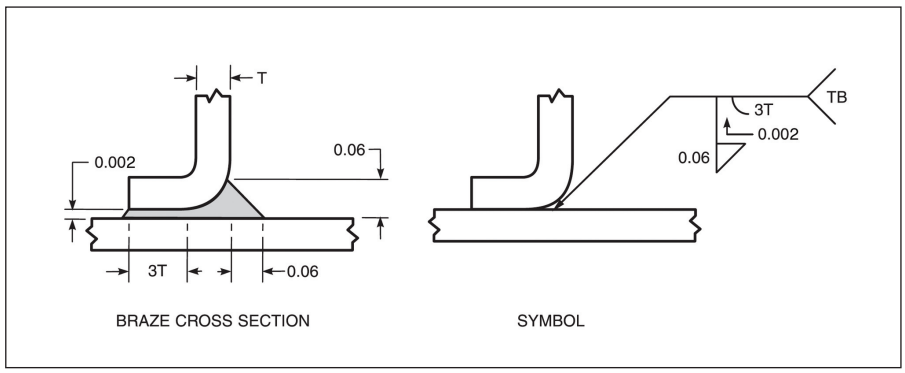

Fig. 6 — Specification of joint clearance, flare radius, and braze fillet size.

though these may be referred to as brazing symbols, the AWS A2 Committee on Definitions and Symbols has designated them as symbols used for brazing, since practically all of the symbols being used are taken from the conventional weld symbols. The only exception is the scarf symbol.

The brazing process reference shall be indicated in the tail of the symbol, as shown in Fig. 2.

If no special preparation other than cleaning is required, only the arrow, reference line, and tail with the brazing process are used — Fig. 2.

Applications of Symbols

Applications of conventional welding symbols to joints for brazing are illustrated in Figs. 3–9. When using symbols for brazing, the elements for braze joint clearance, length of overlap, and bevel angle replace weld root opening, length of weld, and depth of groove, respectively (see Figs. 3 and 5).

Summary

This article provided a review of symbols for brazing. While not used as frequently as welding symbols, these symbols are very powerful and have tremendous applications. This article is part of a series of articles to provide a foundation of basic welding symbol requirements per AWS A2.4. The final two articles will separately cover typical and common errors or misuse of welding symbols, and a comparison of AWS A2.4 and ISO 2553, *Welding and allied processes — Symbolic representation on drawings — Welded joints.*

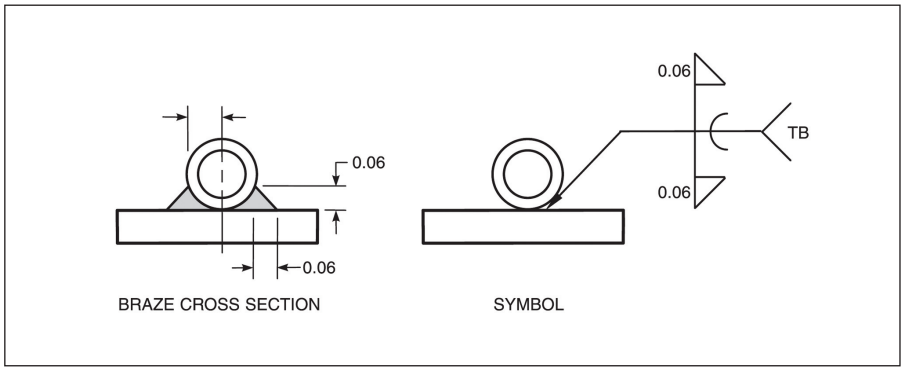

Fig. 7 — Specification of braze flare bevel and braze fillet size.

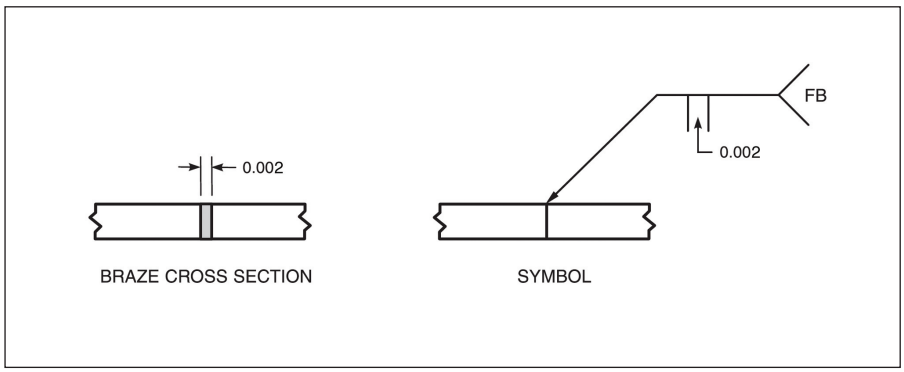

Fig. 8 — Specification of joint clearance.

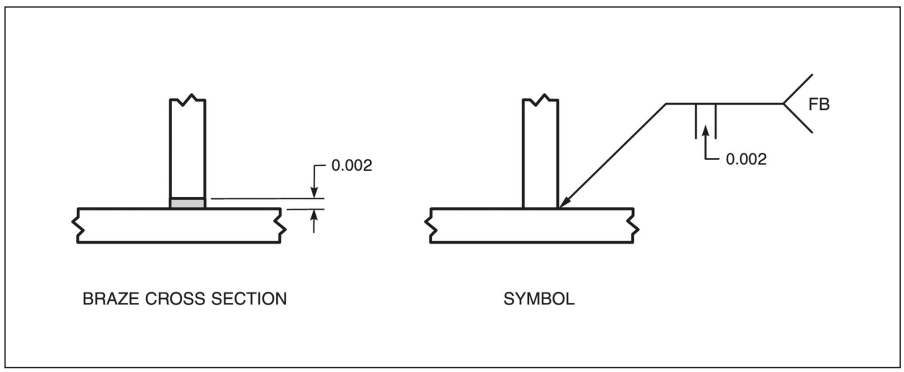

Fig. 9 — Specification of joint clearance.

J. P. CHRISTEIN (jpc00@verizon.net) *is chair of the AWS A2 Committee on Definitions and Symbols as well as chair of the A2C Subcommittee on Symbols. He is also a member of the AWS Technical Activities Committee.*

RICHARD D. CAMPBELL (rdcampbe@bechtel.com) *is with Bechtel Corp. and has taught AWS CWI seminars for more than 21 years. He also developed a seminar on welding symbols that he teaches for AWS at FABTECH shows and in-house seminars. He is also a member of the AWS D1 Structural Welding Committee.*

Guidelines for Submitting an *Inspection Trends* Feature Article

Have you ever thought about writing a feature article for consideration in *Inspection Trends*? If so, our staff stays on the lookout for original, noncommercial, practical, and hands-on stories. Take a look at our editorial calendar — available as part of the American Welding Society's Media Kit at *aws.org/wj* — to see what topics will be highlighted in future issues as well as the editorial deadlines. Potential ideas to focus on could include a case study, recent company project, tips for handling a particular inspection-related activity, and so on.

If you'd like to discuss a particular idea or email a submission for evaluation, please contact Editor Carlos Guzman at *cguzman@aws.org*.

American Welding Society®

www.aws.org

SPREAD THE WORD

on your company around the world

- Promote your full-color photos of your newest and hottest welding products and services to 80,000 AWS members and customers.
- Reach by email 55,000 AWS members in the digital version of *Welding Marketplace* that is included on the *Welding Journal* announcement letter and also includes active links that send clients directly to your website.
- Downloadable from the AWS website, with active links that send clients directly to your website. Website averages 102,000 plus views a month.
- Ask us how you can get your company photo on the *Welding Marketplace* cover.
- Ask us about our special sponsorship opportunities.
- 4 Issues to get your brand name and product in to the hands of AWS members and customers.

Contact AWS for more information at mediasales@aws.org
Jeff Rhodes at 410-316-9867 • Kim Daniele at 410-316-9862

By Jeffry Strahan

Nondestructive Examination at Weber State University

How the school's Manufacturing, Engineering and Technology program (MFET) incorporates welding inspection classes

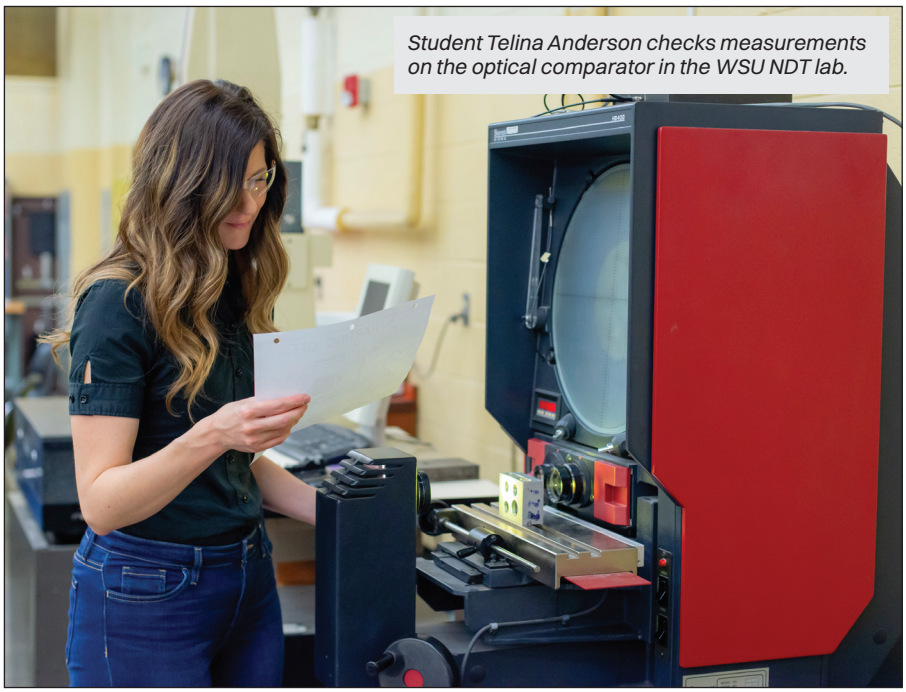

Student Telina Anderson checks measurements on the optical comparator in the WSU NDT lab.

Students seeking to become engineers in structural, mechanical, or manufacturing disciplines need to have a good background in nondestructive examination (NDE). Engineers involved in systems technology or product development are required to conform to the integrity of a system, and the integral parts associated with that system, to have acceptable quality per contract documents.

Many colleges, universities, and trade schools provide candidates with a strong foundational training in the fundamentals of quality control and inspection. One of these schools is Weber State University (WSU), located in Ogden, Utah. The four-year institution trains students to become highly sought-after for their abilities to create new and innovative products, systems, and management tools to help companies achieve their respective mission goals. The school has a long tradition of training students to become engineers in electrical, mechanical, production, design, and welding disciplines. Weber State University's Manufacturing, Engineering and Technology program (MFET) is found within the College of Engineering and Applied Science Technology.

Available Courses

Courses in all aspects of material strengths and testing are geared to prepare a prospective engineering candidate in selecting the correct materials to use in industrial and manufacturing design and applications. From the first years of a student's admission to the MFET program, required classes expose the student to the variety of materials available for manufacturing, challenging them to explore unique and previously unorthodox methods and to push the limits of the material's strength and specific characteristics necessary for product development.

For example, the MFET 2360 – Manufacturing Processes and Materials class teaches about tolerances and finishes of specific end uses in certain materials and the ability to arrive at the prescribed geometric dimensioning and tolerancing required per specifications. Professor Mary Foss is one of the instructors in this class. She introduces her students early in their pursuit of an engineering degree to the nuances of material strengths and the equipment utilized to ascertain a material's yield points and ultimate strengths — Fig. 1.

Labs are also designed to address the surface conditions of materials, using optical comparators and surface roughness testing guides. Students are exposed to the manufacturing and processing limitations of the broad array of metals, composites, ceramics, and ceramic/metal combinations (cermets) that are commercially available.

Continuing with their undergraduate preparation for a career in engineering, a student is required to take the MFET 3060 – Codes, Weld Inspection, and Quality Assurance class. This class prepares the student for a world of reading and understanding the various codes and specifications so intricately associated with the manufacturing world, and to deal with inspections and quality assurance. Students learn to navigate the governing aspects of manufacturing processes and the quality control measures seen in processes such as forming, machining, and welding. Emphasis is placed on understanding the differences between documents that have a governing ability and those that are meant to guide companies to produce quality outcomes.

Student engineer candidates also need to become proficient in the interpretation and understanding of welding symbology. Students at WSU undergo training and testing in all aspects of weld and inspection symbols, resulting in a graduate who can fully apply appropriate symbols to the task, whether it is welding or inspection. Hands-on labs in this codes class require the creation of drawings and recognizing errors in prints and isometric layouts. For a quality control engineer or manager, the need for thoroughly understanding and directing the NDE methods is vital to high-quality outcomes of inspections conducted on fabrications and the equipment used to produce the varied products of modern manufacturing. Many of the graduates from this program go on to be quality control managers or welding quality controllers at companies such as Caterpillar, Terex, and John Deere.

Another class all MFET majors are required to take is MFET 3820 – Nondestructive Testing. This class explores the background theories of the various methods and techniques of product and process examination, including most destructive tests such as tensile, bend, and Charpy or IZOD testing. Although primarily focused on the nondestructive methods, there is a continuation of concepts learned in the MFET 2150 – Metal Forming, Casting and Welding and MFET 2360 – Manufacturing Processes and Materials classes so that the student learns a

Fig. 1 — Professor Mary Foss measures the cross-section area of a tensile test specimen for her MFET 2360 class lab.

Fig. 2 — Professor Mark Baugh teaches NDT theory and practice in the lecture hall.

range of theory and experience in materials testing.

Class sessions deal with the physics, chemistry, and theory of the techniques and equipment of the most used NDE methods and culminate in targeted practical labs that focus on the nuances of operating the latest in NDE equipment, helping the student to recognize the wide array of anomalies that can be encountered in the industrial manufacturing workplace — Fig. 2.

Hands-on Application and NDE Methods

Central to the success of students in this program is the hands-on application of subject matter learned in the classroom. While there is a comprehensive approach to the theoretical information regarding the methods of NDE, there is an even more thorough experience in the NDT laboratory where students are subjected to exercises to hone their ability to correctly handle the tools of the particular testing method, in addition to sharpening their skill in recognizing and measuring the myriad of defects encountered in the manufacturing and inspection realms.

One of the most frequently used methods is penetrant examination (PT). All of the various types of this method are covered in class, and students are required to have a working knowledge of which method works best in the many situations that PT can be counted on to secure quality outcomes. Students are taught the physics of how the method is capable of locating and indicating flaws and how "false positives" can be encountered — Fig. 3.

The labs give students ample experience in mastering the various tools and techniques of magnetic particle examination (MT). After passing the course material in the classroom, a student cycles through several evolutions of training in the NDT lab using the school's permanent magnet and conventional magnetic particle yokes and fixtures to master the manipulations of the equipment. Central to the student's learning are the laboratory test fixtures in which several flaws and defects are known and located.

In the ultrasonic examination (UT) labs, students use the latest equipment to acquire skills in shear wave detection of subsurface material flaws and weld defects. Students learn the science behind how this inspection method works as well as how to set up and calibrate the various transducers and UT units in the laboratory — Fig. 4.

Fig. 3 — Student Shaelynn Dickey examines an industrial sample for defects using the PT method in the MFET 3820 course.

Phased array ultrasonic testing (PAUT) is also covered in the curriculum, training students in reading the detailed output produced by this sensitive and broadly used inspection method. Local NDE companies in the Wasatch Front area near Ogden come to the university to show the latest technique and PAUT analysis of the chromatic readings displaying various flaw profiles. Students greatly benefit from industrial demonstrations and guest lectures, as they improve their quality management education.

Radiographic examination (RT) is a central training subject in the MFET course, and students receive a comprehensive background in the fundamentals of this method. Professor Mark Baugh worked with the NDT Resource training website to produce training modules that can be used by students, instructors, and NDE professionals. Students are given thorough training in reading radiographs and dealing with anomalies, so they are well prepared to continue on a track by which they might intern or be employed by nationwide companies that employ RT technicians.

Computed radiography (CR) is fast becoming the preferred radiography inspection method. The images produced by this method are much clearer and have an indefinite shelf life, as opposed to film radiography, which can have many problems associated with film preparation, film processing, and film clarity.

The topic of computer radiography is incorporated into the MFET 3820 class, and significant time there is spent addressing the subject of CR as compared to the normal RT inspection process.

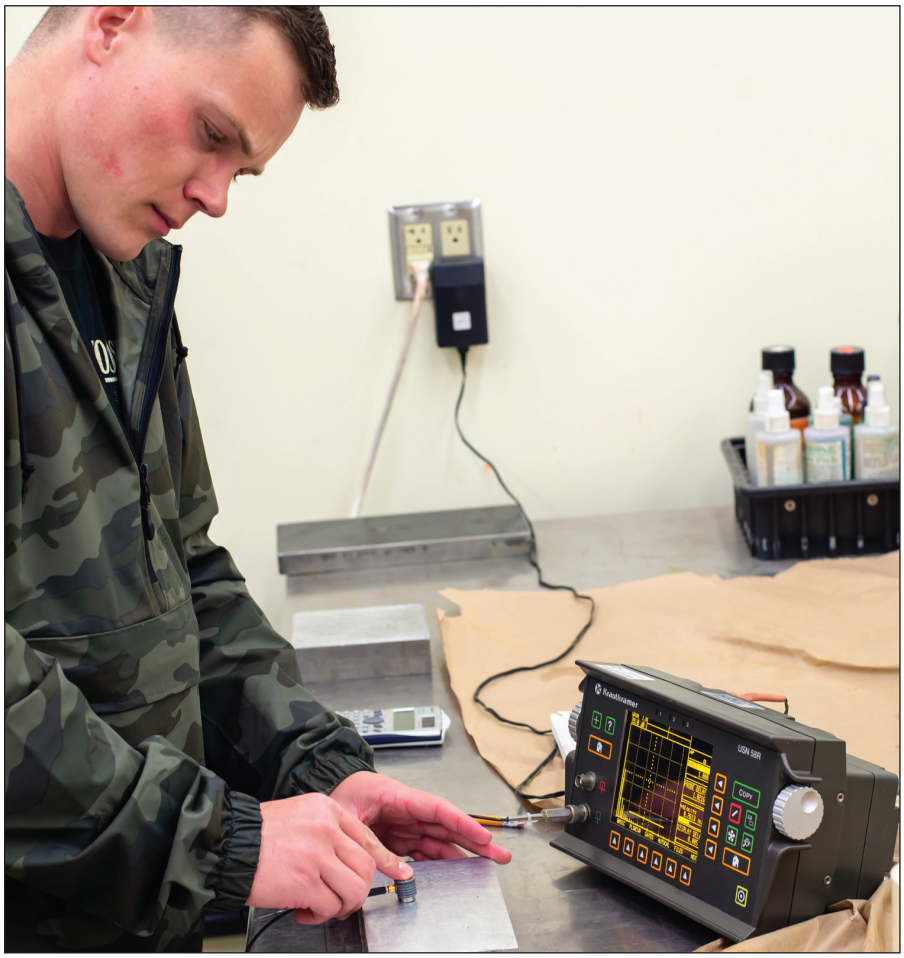

Fig. 4 — Student Dirk Brown searches for anomalies in a lab test block using the UT method.

Visual Examination Prerequisite

A prerequisite to studying all of these methods is the critical inspection method of visual examination (VT). Before students can hope to master the intricacies of the invasive, volumetric systems of nondestructive examination, he or she must become proficient at understanding and identifying the wide range of defects and anomalies seen in all phases of manufacturing and production fabrication. A thorough study of these imperfections must preclude the advancement to more technological inspection operations.

Students in the MFET NDT courses at WSU have studied these categorical flaws in detail by the time they become enrolled in MFET 3820. Classes that are prerequisites for 3820 include MFET 2153 – Metal Welding Lecture/Lab, MFET 2670 – GMA, FCA and GTA Welding, and MFET 3750 – Welding Metallurgy I, which are classes containing elements of weld defect assessment and material production deficiencies. MFET 2153 is considered the first course in welding, with MFET 2670 being an intermediate course focusing on more advanced techniques, and MFET 3750 being a course in advanced welding processes and methods. These classes have a continuously increased level of study and examination of welding and manufacturing defects that the MFET student must successfully deal with in coordination to the applicable codes. Recognition and assessment mastery of material and process blemishes prepares the engineering student for VT as a foundation for achievement in the volumetric testing categories of NDE training and vocational realization.

Critical measuring ability and a functional understanding of measuring instruments is the first series of lessons given in the NDT course at WSU. Being able to measure welds and defects accurately is *a priori* to being a skilled welding or manufacturing inspector or quality control manager.

Once the student has mastered the ability to measure correctly, an engineering candidate must learn to recognize and assess the many forms of material and workmanship imperfections. Using multiple NDE resources and hands-on training, the WSU student acquires the proficiencies needed to become fluent in inspection methods.

AWS Resources

The American Welding Society (AWS) has many resources the university takes advantage of, along with student instruction to fulfill the requirements of becoming proficient inspectors and engineers for prospective employers. Central to these resources are AWS Standards and Specifications, which give students and employers the foundational documentation of recognized material and welding process defects and deficiencies. Being industry-wide recognized documents, AWS Standards provide a guide to understanding these problems in a way that transcends the variety of code documents welders, engineers, and quality-control managers find themselves operating in throughout the international manufacturing scene.

The Weber State University Manufacturing Engineering Technology College is pleased to incorporate these internationally recognized documents in the NDE portions of training provided to the students who come to Utah to become engineers, inspectors, and quality-control managers. While the university builds upon these pathways to vocational and intellectual success, it also recognizes that the production, manufacturing, and quality industry is in a constant state of improvement.

With that in mind, WSU continuously seeks to improve its programs and offerings through a customer-oriented vigil of the scientific and technological advances that grow at an exponential rate in our ever-changing world.

JEFFRY STRAHAN
(slaggdog17@ gmail.com) *is an instructor at Weber State University. He is an AWS CWI, CRI, CWE, and API 1169 CWI. He has a BS and MS from Utah State University.*

By Lance C. Becker

Tips for Selecting a Welding Inspection and Document Management Software Program

Users should establish objectives and criteria to choose the best welding inspection software for their application

Welding inspection and document management software are the industry standard for supporting contract and project quality control (QC) and quality assurance (QA) operations.
The Certified Welding Inspector (CWI) will employ this software technology to accomplish set goals by using the program's features and functions. Prior to making an investment in a specific welding inspection program, users should establish their own objectives and criteria from which to consider, evaluate, and select the best available program for their application.

Objectives, or set goals, represent the desired outcomes of the CWI's experience or interface with the welding inspection software. This article presents two general objectives for consideration: gaining task efficiency and establishing/maintaining project compliance.

Criteria are standards against which you measure your options (Ref. 1). In this article, criteria are represented by the most desirable or most useful features of the program.

Whether your intended objectives are general or specific, a thorough consideration should always be the first step in the process of selecting a welding inspection software program. The purpose of this article is not to establish what makes the best industry-wide software program, but rather to present a standardized approach to finding your best software program. The following framework may serve the CWI, or other user, as a guide to critical considerations in the process of selecting their best possible inspection software program.

Objective: Gaining Task Efficiency

Task efficiency is increased by enhancing the usability and utility of the interface. Criteria to meet this objective include program features such as a mobile device application, a joint image application, and a versatile code application.

Criterion: Program Should Have a Usable Mobile Device Application

A true software mobile device application will adapt to the device, switching screen size, document design, and content organization to accommodate the tablet, phone, or other mobile device. The best possible welding inspection management software provides the user with a mobile device application. Utilizing the compact mobile device presents the CWI with many advantages, increasing his or her efficiency through the interface's usability.

A CWI will perform a majority of his or her work in the field, where a mobile device becomes the preferred tool. Welding inspection is performed near the welding operations, "often requiring work to be performed on ladders and scaffolds" (Ref. 2). The CWI needs to use the program in that location. "This relationship between content (the information individuals can use) and contexts (where they use that content) determines what constitutes the usable design — or the usability of a product" (Ref. 3).

In addition to task efficiency through application usability, the mobile device can enhance the safety of the CWI's work. Welding inspection software programs applied through compact mobile devices reduce or eliminate the need for bulky codebooks and paper project specifications, which are as much a fire hazard as they are cumbersome. In its portability, the feature will eliminate the need for the CWI to spread out open books and paper drawings in hot work zones, as well as carry books, binders, and drawings up ladders and scaffolds.

Criterion: Program Should Have an Image Application

A welding procedure specification (WPS) includes much information. Essential variables such as process, voltage output, and joint type are required data. A formal WPS will often also include an image of the joint design, along with joint geometry, dimensions, and other details. This practice is encouraged by the AWS: "Use of images that show the thickness of materials, details of the joint geometry, or references to such images in specifications are suitable ways of expressing this necessary information" (Ref. 4).

A preferred welding inspection and document management software program will possess a database containing detailed images of prequalified joints. Furthermore, an ideal program will have the capability to create, store, and display images. When establishing or assisting with the creation of a WPS, the CWI, or other welding in-

Welding inspection and document management software technology is becoming the CWI's standardized approach to QC and QA operations and documentation.

spection software user, should be able to select, or even create, a detailed image of the joint configuration. Upon the user's command, the program should store, retrieve, and display the image in the proper location on the WPS document.

Welding inspection document management softwares with the desirable capability of storing and displaying joint images are readily available. This characteristic is useful in the creation and development of documents such as the WPS, the welding procedure qualification record (WPQR), and other project and task-specific records. The CWI is here able to select a joint image and include the image in a new document.

More advanced software programs may allow the user to detail and customize the image of the joint. An advanced interface will include interactive features. Details such as material thickness and groove angle can be manipulated. Once entered, details can be added to the image, i.e., surface preparation, backing for groove welds, backgouging, and other common requirements can be shown. However, it is important to note that not all applications, and budgets, will require this advanced feature.

Criterion: Program Should Have a Code Application

Welding inspection exists to validate conformance to established standards. Codes, which contain the standards for specific applications, are the means for inspection work. The right welding inspection software program will provide the user with access to the appropriate code. Additionally, the program will automatically update a particular code to its most current edition, along with any intermittent updates, revisions, or modifications.

When working in the field, even the more experienced CWIs do require access to their appropriate text for consideration or verification of code-related information. Although a CWI will usually specialize in one specific code, he or she does not necessarily have the code's voluminous standards and details memorized. The AWS D1.1, *Structural Welding Code — Steel* is more than 600 pages long, containing nine complex sections of organized information. The ASME *Boiler and Pressure Vessel Code* is long and complex as well. According to best practice, "these are reference documents and should be readily available for detailed information at any time in the fabrication process" (Ref. 5).

The right welding inspection software program will allow the administrators and users to select the appropriate code to employ. This is determined by the welding inspection company's area of expertise, the CWI's area of specialization, and the contract or project's scope of work.

Bridge or structural steel inspectors typically do not need to burn available data storage on the mechanical welding codes; in like manner, boiler/pressure vessel or pipeline inspectors probably do not wish to subscribe to irrelevant codes either.

Objective: Establish/ Maintain Project Compliance

Although the desired outcome of welding inspection work is the compliance of acceptable product throughout a contract or project, the deliverable of welding inspection work is documentation. Uniform and compliant documents are critical to successful welding inspection work.

Welding Inspection and Document Management Software Program Examples

This is a short list of software programs available. (This list is for reference only; AWS does not directly endorse any of these programs.)

- CEI Prowrite (*thinkcei.com*)
- Welders Log (*welderslog.com*)
- WeldEye Welding Procedures (*weldeye.com*)
- TWI Welding Qualifier (*twisoftware.com*)
- C-spec (*cspec.com*)

Program Should Provide Uniform Documents

"Common welding documents associated with code work include the pre-WPS, PQR, WPS, WPQ [welder performance qualification], and the procedure submittal" (Ref. 6). The various document types should be presented in uniform formats. Document design, content organization, and headings should exhibit a consistency throughout the portfolio.

The best welding inspection and document management software program will allow the user to select, set up, and save the desired document formats for reuse. Projects will often recommend or require specific document design, formatted to comply with the end user's requirements. These may include government, military, or industry-/project-specific title blocks and document formats. Different document designs should be readily available for use or easy to design to accommodate specific project requirements.

Program Should Meet Project-Specific Software Requirements

Most large-scale welding and fabrication projects do mandate the employment of electronic software for the formal submission of all required welding and material inspection documents. In the fast-paced industry of heavy-duty design and construction, the contractual obligations for such work require QC and QA documents be made immediately available and accessible to all interested parties. This is due to the fact that, very often, inspection documents must be reviewed and approved prior to the release of the next project task or phase of work. Engineers, inspectors, project managers, and other professionals will require a real-time, common accessibility to project documents through share drives, intranets, and cloud-based exchanges to organize and produce both in-process and permanent project documents.

A contract or project's preliminary and pre-work stages such as planning, qualification, and budgetary estimating will clarify the expectations and requirements for the participating company's methods of documentation. Welding inspection and document management software programs, and other QC and QA software programs, will often be either specified by brand or trade name or required to integrate into a larger system of electronic documentation and management. It is commonplace that project specifications will mandate certain characteristics or capabilities that will comply, and even communicate, with other project software programs. One current large-scale project qualifies welding inspection software as follows:

> The welding inspection document tation management software must maintain a progressive, real-time electronic log with high-level security capabilities. The various documents must also be compiled in a formal electronic publication for submission, capable of being converted to a PDF by means of Advanced Content Management (ACM) Arbortext or an equivalent sophisticated electronic document publication platform.

Typically, the larger the project, the more sophisticated the software requirements. And, as can be interpreted from the aforementioned qualification, a welding inspection company must take project qualifications on documentation very seriously. Prior to the selection of welding inspection and document management software programs for complex, large-scale projects with software specifications like those previously mentioned, it is recommended that a thorough, perhaps intimate, consideration of objectives and criteria is made.

Conclusion

Welding inspection and document management software technology is becoming the CWI's standardized approach to QC and QA operations and documentation. As with any technology that is industry commonplace, many different brands, variations, and options exist. Prior to making the investment in a particular software program, users should establish objectives and criteria from which to evaluate the available software programs.

This article presents two generalized objectives: gaining task efficiency and establishing/maintaining project compliance. Within these objectives are generalized criteria, considering features available on some welding inspection software programs. By establishing your own company- and/or project-specific objectives and criteria prior to investing and committing to a specific welding inspection software program, the best possible program for your own operation can be selected and employed, meeting your own objectives for welding inspection and document control.

References

1. Markel, M. 2015. *Technical Communication*. Bedford/St. Martin's.
2. AWS. 2000. *Certification Manual for Welding Inspectors*. American Welding Society: Miami, Fla.
3. St. Amant, K. 2018., Context, Culture, and Usability. *Intercom,* pp. 31, 32.
4. AWS. 2012. A2.4:2012, *Standard Symbols for Welding, Brazing, and Nondestructive Examination*. American Welding Society: Miami, Fla.
5. Schlafly, T. J., and Miller, D. K. 2016. Summary of changes in D1.1:*2015, Structural Welding Code — Steel. Welding Journal* 95(1): 44–48.
6. Howard, A. 2018. How software increases welding process efficiency. *Welding Journal* 97(2): 38–41.

LANCE C. BECKER
(lancebecker@illinoiscrane.com) *is an engineer at Illinois Crane Inc., Chicago, Ill., and an AWS Certified Welding Supervisor.*

News Bulletins

— continued from page 7

"With the AWS SENSE-aligned curriculum implemented, and the recent donations from ESAB, it is expected that the high school graduates from the program will continue to be better prepared to enter the welding industry in Indonesia than any other high school students, [and] the program will be progressing into full AWS QC 21, *Specification for the AWS Accreditation of SENSE Welder Training Programs* in the coming year," said Septriana.

Nine-Year CWI Recertification Courses Take Place in Houston, Tex., and Seattle, Wash.

These nine-year CWI recertification seminar attendees, led by instructor Paul Lynn Sturgill, toured Devasco International Inc., Houston, Tex.

The American Welding Society (AWS) held its nine-year Certified Welding Inspector (CWI) recertification course on Nov. 25–30, 2018, in Houston, Tex., and April 7–12 in Seattle, Wash.

The Houston seminar was taught by Paul Lynn Sturgill, Senior Certified Welding Inspector (SCWI), ASNT Level III VT instructor, 3-A Certified Conformance Evaluator (CCE), and owner of Sturgill Welding & Code Consulting. The six-day, nine-year CWI recertification course was comprised of the following: a review of the visual inspection workshop of the original CWI seminar; discussions of recently developed welding processes; round-table discussions of visual inspection issues, particularly enforcement; a presentation on welding of the various grades of stainless steels; toughness issues with low-carbon and -alloy steels; and inspection ethics issues. Course students, many of whom are veteran inspectors, were invited to share their experiences and information on issues they've encountered.

Sturgill, who has been teaching the course for ten years, also treated attendants to a tour of Devasco International Inc., a manufacturer of custom filler metals and electrodes, which is comprised of three subcompanies in one building.

The Seattle seminar was taught by James Greer, CWE, SCWI, and president of Techno-Weld Welding Consultants, at Terex-Genie Lift facility, an aerial lift equipment provider. This nine-year CWI recertification class consisted of 80 h of work

At Terex-Genie Lift facility, Seattle, Wash., these nine-year CWI recertification course attendees were taught by James Greer.

with homework assigned every night; there were also oral presentations, reviews of the Part B practical section of the exam and general knowledge test, code work, a tour of the facility, and more.

Please see the Certification Schedule in this issue for upcoming certification dates. — *Roline Pascal, assitant editor.*

AWS American Welding Society

Participate on the AWS Member Network

Did you know that as an AWS member, you can interact with other members from across the world through the AWS Member Network?

Simply sign in at membernetwork.aws.org/home, create a profile, then join the discussion by asking or answering questions with your peers. Quite often, members receive beneficial advice and guidance through feedback left by participants.

In addition, this site allows browsing through discussion posts, offers the opportunity to become a volunteer leader, and provides a resource library.

Attention Schools in Training and Testing for Materials Evaluation, Weld Inspection, and Quality Assurance:

Included in this section are welding schools across the country that have taken this advertising opportunity to promote their resources, both to industry in need of welders and to those searching for a solid career path to employment and growth. Reach more than 36,000 readers whose livelihoods depend on quality assurance, materials testing, or weld inspection with your school profile.

This logo indicates that the facility is a **Weld-Ed** affiliate. The National Center for Welding Education and Training (Weld-Ed) is a partnership of community colleges, universities, business and industry, and the American Welding Society, and is funded by the National Science Foundation. The Center's primary mission is to increase the quantity and quality of welding and materials joining technicians to meet industry demand through curriculum reform and educator professional development. Additional information is available at **weld-ed.org**.

Weld-Ed
National Center for Welding Education and Training

All-State Career School
Pittsburgh, Pa.

Did you know that welders are capable of gaining employment in a variety of industries, including car racing and manufacturing? At All-State Career School's welding program you will be provided with a foundation in industrial welding techniques, crafting skills, and welding mathematics to prepare you for a rewarding weldingcareer. Fulfill your dream of becoming specialized in welding, cutting, soldering, or brazing with training from All-State Career School.

ALL-STATE CAREER SCHOOL

1200 Lebanon Rd., Suite 101
West Mifflin, PA 15122
(412) 823-1818
allstatecareer.edu

All-State Career School
Lester, Pa.

Are you interested in gaining the skills needed to enter the rewarding field of welding? If so, choose All-State Career School in Lester, Pa. Our welding instructors take pride in providing our students with essential education and training to create the well-rounded welding professional – one who is skillful with today's welding processes. The welding curriculum at All-State Career School is structured to provide focus on the design, production, performance, and maintenance of welding materials. Learn how you can enroll at All-State today and train to be able to earn your certificate in welding.

ALL-STATE CAREER SCHOOL

501 Seminole Street
Lester, PA 19029
(610) 521-1818
allstatecareer.edu

American River College

The welding program at American River College offers an Associate of Science degree in Welding Technology as well as certificate options. Students have the opportunity to choose their welding path if particular processes are desired. The program has been qualified as an Accredited Test Facility (ATF) by the American Welding Society. Options for welding inspection, ultrasonic testing and sculpture are offered. The welding course is made affordable for students with no material lab fees.

ARC

4700 College Oak Drive
Sacramento, CA 95841
(916) 484-8354
messiec@arc.losrios.edu
arc.losrios.edu

Butte-Glenn Community College

Recipients of NASDCTEc 2015 Excellence in Action award for the best CTE program in the nation. CITEA 2015 Community College Program of the Year. The Welding Technology program is designed to produce qualified personnel for certified welding jobs. Butte has modern and well-equipped welding facilities. Program standards are in accordance with the AWS SENSE program and follows NCCER curriculum, ASME, and API codes. Produces entry-level welding technicians qualified in the 6-G pipe position. Large emphasis on SMAW, FCAW, GMAW, GTAW, OAW, OFC, PAC and AAC processes, in all positions using various metals and alloys. Qualifications earned in AWS, ASME, and API according to personal skill. **PG&E Power Pathway Gas Pipeline Welding Capstone Program:** The Pathway specifically trains welders for potential careers within the petrochemical/natural gas pipeline industry.

Don Robinson,
robinsondo@butte.edu
(530) 893-7509
Miles Peacock, peacockmi@butte.edu
(530) 879-6162
Chris Armitage, armitagech@butte.edu
(530) 895-2911
Russell Thomas, thomasru@butte.edu
(530) 879-6140
Russell Pitter; pitterru@butte.edu
(530) 879-6138
Kyle Lovelady, loveladyky@butte.edu
(530) 879-6138
Seth Vader, vaderse@butte.edu
(530) 879-6138 • Fax: (530) 895-2302

CDA Technical Institute Maritime Welding Program

CDA Technical Institute's Welding Program prepares graduates for an exciting career in welding. This is a program designed to provide graduates with the skills they need to go to work immediately. Our graduates are working in all types of welding environments, including shipyard, fabrication, industrial construction, and manufacturing industries. We developed the curriculum by working closely with the leading companies in these industries. Unlike traditional welding schools that teach students how to weld in a booth, CDA simulates the environment of a real world of welding with fabrication projects, crane signals and safety, rigging, and offshore survival. Our 16 week curriculum is associated with NCCER and supports the AWS SENSE guidelines to ensure our students exceed employers' expectations. Call or visit our website for more details.

Drew Duffy
Admission – CDA Welding Program
Jacksonville, FL 32208
(888) 974-2232 toll free
(904) 766-7736
cda.edu

CDA Technical Institute Commercial Diving Program with Underwater Welding

CDA Technical Institute is the only fully accredited diver training program with IMCA-recognized training, on-campus housing, and a full meal plan. CDA offers a comprehensive and rigorous (20 weeks) program. CDA's graduates earn certifications from the Association of Commercial Diving Educators, Association of Diving Contractors International, Diver Certification Board of Canada (a truly internationally recognized certification), National Center for Construction Education and Research, Haz-Woper Environmental Training. They can also earn certifications from the American Welding Society, National Board of Diving and Hyperbaric Medical Technicians, National Academy of Scuba Educators, and National Registry Emergency Medical Technicians. Call or visit our website for more details.

Allen G. Garber, CAO
Jacksonville, FL 32208
(888) 974-2232 toll free
(904) 766-7736
cda.edu

Central Piedmont Community College James Turner Institute of Welding Technology

Founded 1963

CPCC offers welding and nondestructive examination training at its Charlotte, N.C., Harper Campus. Earn a certificate or Associate in Applied Science Degree in Welding Technology and/or NDE. Gain the skills needed for today's workforce; oxyfuel, SMAW, STAW, GMAW, FCAW and more. We also offer support courses in metallurgy, blueprint reading, quality control, robotics and automated welding at our AWS fully accredited testing facility. We have a student chapter of the American Welding Society and an active blacksmith club.

CENTRAL PIEDMONT COMMUNITY COLLEGE

PO Box 35009
Charlotte, NC 28235
(704) 330-2722
cpcc.edu/welding

Cosumnes River College

Cosumnes River College Welding Technology Department is a competitive trade program located in Sacramento, California. The modern shop is fully equipped with ESAB, Miller Electric and Lincoln Electric welding and plasma cutting machines. The laboratory offers 25 welding stations that are outfitted with FCAW, SMAW, GMAW, GTAW and OFC processes for all types of materials. Students are taught how to prepare welding coupons with band-saws, iron workers, track torches, plasma cutters with layout procedures and blueprints.

COSUMNES RIVER COLLEGE

8401 Center Parkway
Sacramento, CA 95823
Jason Roberts
(916) 691-7386
robertj@crc.losrios.edu

Earlbeck Gases & Technologies

The Earlbeck Technical Center offers a complete curriculum of welding classes through our college partners. Our Fundamentals of Welding course instructs in the basics of oxyfuel, GTAW, GMAW, and SMAW. Students may then progress through intermediate and advanced level classes, visual weld inspection, and blueprint reading for welders; customized and mobile training are available. Winner of 2017 AWS & WEMCO Excellence in Welding Award in the Educational Facility category and an AWS Accredited Test Facility (ATF).

EARLBECK TECHNICAL CENTER

Baltimore, MD
York, PA
Scranton, PA
(410) 687-8400
dhodges@earlbeck.com
earlbeck.com

Fortis College Smyrna, Ga.

Kick start your welding career with a Fortis College education. In our Welding Technology program you can get the training and hands-on expertise needed to enter the growing welding industry in various careers, including industrial welders, check welders, welding apprentices and more. Our courses offer instruction on the intricacies of welding and all its phases including the use of destructive and nondestructive testing to ensure our students have a thorough understanding of quality welding. Contact us today to learn more about our program and schedule a campus visit.

FORTIS COLLEGE

2140 South Cobb Drive
Smyrna, GA 30080
(770) 980-0002
fortis.edu

Fortis College Cincinnati, Ohio

Enjoy using your hands and finding practical solutions to complex problems? If so, a career in welding could be for you! The first step is to gain the essential training to be successful in the field. At Fortis we have the training, guidance, and resources to help you succeed. Our Welding Technology program offers instruction in fundamental math applications, introduction to oxyfuel cutting, and various welding processes to make you skillful in this skilled trade with a future. Give Fortis a call today to learn more and to schedule a campus visit.

FORTIS COLLEGE

11499 Chester Road, Suite 200
Cincinnati, OH 45246
(513) 771-2795
fortis.edu

Fortis Institute
Cuyahoga Falls, Ohio

Fortis College Cuyahoga Falls, formerly known as National Institute of Technology, was founded in Cuyahoga Falls, Ohio in 1966. The Welding Technician program teaches students the principles of welding technology. In the program, students are introduced to basic air carbon arc, oxyfuel, and plasma arc cutting processes. The fundamental concepts of shielded metal arc welding and gas metal arc welding, as well as flux core arc welding are taught. Pipe welding and gas tungsten arcwelding applications are also included in the curriculum.

2545 Bailey Road
Cuyahoga Falls, OH 44221
(330) 923-9959
fortis.edu

HACC, Central Pennsylvania's Community College

HACC, Central Pennsylvania's Community College, offers training in welding at its Midtown site in Harrisburg, Pa., as well as the York Campus in York, Pa. Students can obtain a diploma or certificate in welding or an AA degree in technology studies, which prepares students with the knowledge and skills needed for immediate job entry. The diploma program places emphasis on the basic techniques of blueprint reading, oxy fuel welding, shielded metal arc welding, gas metal arc welding and gas tungsten arc welding. The certificate program offers advanced skills in flux cored and pipe welding, robotics and testing and inspection. Hands-on training is provided in a state-of-the art laboratory, which includes welding on carbon steel, aluminum, and stainless steel. Instruction prepares students for American Welding Society certification tests and American Society of Mechanical Engineers Certification tests.

One HACC Drive
Harrisburg, PA 17110

York Location:
2010 Pennsylvania Ave
York, PA 17404

1-800-ABC-HACC
admit@hacc.edu

Georgia Trade School
Founded 2012

Georgia Trade School graduates build iconic projects such has Mercedes-Benz Stadium and SunTrust Park, iconic sets including *Stranger Things* and *The Fast and the Furious* franchise, and protect our national security building ships for the Navy, Coast Guard and Marines. In an era where the average welder is 55, our student body is just 19, providing a true college alternative. With over 700 graduates across 20 states, Georgia Trade School welders are rebuilding America.

Joanna Vinson, President
4231 Southside Drive
Acworth, GA 30101
(770) 590-9353
jvinsone@georgiatradeschool.com
georgiatradeschool.com

Hill College
Founded 1923

Hill College Welding program offers comprehensive training in a hot job market on both the Hillsboro and Cleburne, Texas, campuses. You can choose from several program options, including a certificate in basic welding, up to an Associate of Applied Science degree in Welding Technology. Hill College is equipped with state-of-the-art technology to help you get a jump start on your career. With the hands-on curriculum, you are given experience that exceeds what a classroom can teach.

Welding Department
(817) 760-5555
bbennett@hillcollege.edu
www.hillcollege.edu

Wallace Welding Bldg.
197 Walnut Hill Ave.
Hillsboro, TX 76645

Cleburne Technical Center
319 E. Henderson St.
Cleburne, TX 76031

hillcollege.edu/academics/TBusiness-Industry/Welding/Welding.html

Hobart Institute of Welding Technology

Founded 1930

Hobart Institute of Welding Technology offers a wide range of welding skill and technical training classes and certifications. The catalog lists the skill training programs, over 25 individual courses, corporate training, and a listing of the AWS® certified testing services provided. Corporate training may be done at our facility or yours. The HIWT bookstore offers complete training curriculum that include DVDs, instructor guides, and student workbooks along with other weld education-related items.

400 Trade Square East
Troy, OH 45363
(937) 332-9500
Fax: (937) 332-9550
welding.org

ISTUC

Founded 2001

ISTUC, S.C. was founded in 2001 with the objective of helping Mexico become more competitive and create reliability in the industry. The institute is an IIW/EWF-authorized training body for specialized courses such as Welding Engineer, Specialist, and International Welding Inspector. ISTUC is one of the five institutions accredited by the EWF for Laser Welding Engineer, and is an accredited facility for AWS programs (welders, inspectors, engineers, supervisors, and educators) and it offers specialized welding courses for automotive and aerospace welding. ISTUC has a strong NDE training courses in level I, II and III for VT, PT, MT, UT.

Complejo Industrial Terra Business Park
Primer Retorno Universitario No. 1 Interior 74-A.
Col. La Pradera 76269
El Marques, Queretaro, Mexico
Ph/Fax: 01-442-2201486 / 2201699
istuc.com

Mitchell Technical Institute

Mitchell Technical Institute offers an industry-driven Welding and Manufacturing Technology program providing skills for graduates to excel in welding, machining, drafting, laser/plasma cutting systems, robotics and lean manufacturing techniques. Instruction is AWS-code based. During the second year, students learn clearly defined and communicated welding quality standards and learn to test welds by various methods including dye penetrant, radiographic, visual, tensile load testing and bend-and-break testing conducted by a CWI within an ATF facility.

1800 E. Spruce St.
Mitchell, SD 57301
(800) 684-1969
mitchelltech.edu

Modern Welding School

Founded 1936

Modern Welding School is an ACCSC School of Excellence award recipient. Students receive training in OAW, SMAW, pipe, GTAW, and GMAW/FCAW. The school's fulltime program is 900 hours and the evening part time program is 665 hours. Job placement assistance is available for students of the career programs. Training is also available to companies looking for specialized welding training, welding certification testing, or consulting for their personnel.

Schenectady, NY 12304
Jeffrey Daubert, Vice President
1-800-396-6810 or
(518) 374-1216
MWS@albany.twcbc.com
modernwelding.com

Odessa College

Nationally recognized as one of the leading colleges in the country, the award-winning Odessa College Welding Technology program provides the educational training for tomorrow's welding technicians. The four specialized lab areas are equipped with 75 welding stations for instruction on SMAW, GMAW, FCAW, GTAW, SAW and robotic welding procedures. The cutting processes include oxyfuel, plasma and CAC-A in both manual and mechanized methods.
The modern classrooms utilize Smartwall technology along with Lincoln Electric Virtual Welding training systems to enhance the learning experience. Students have the opportunity to earn a one-year certificate or a two-year A.A.S. degree in Welding Technology. The program is an AWS Educational Institution Member and a FMA Certified Education Center. Our AWS Student Chapter is active on the OC campus and in our community.

201 W. University
Odessa, TX 79764
(432) 335-6474
Syed M. Naqvi – CWI/CWE
odessa.edu/dept/welding
(432) 335-6306

Rochester Arc + Flame Center

Rochester Arc + Flame Center is a privately owned training facility that offers welding training to the public. The business has partnered with Monroe Community College to offer the Welding and Fabrication Certificate, a 20-week, 450-hour intensive program designed to produce entry-level fabricators. Also available is a 10-month night class version of this same industry certificate program. Customized training, inspection, metallurgy and NDE are also specialties. Arc + Flame Center received the 2016 Excellence in Welding Award in the Educational Facility category.

125 Fedex Way,
Rochester, NY 14624
(585) 349-7110
rocafc.com

San Jacinto College
Serving East Harris County, Texas

Founded 1961

San Jacinto College provides students the Welding and Inspection training skills for jobs in industrial, petro-chem and maritime enterprises found along the Houston Ship Channel and Texas Gulf Coast region.

Come train at San Jacinto College for your future in one of the region's largest and best equipped facilities, where you can earn your certificate or degree in welding or inspection technology (nondestructive testing). Our accredited programs are taught to AWS, ASNT SNT-TC-1A and NCCER standards.

Welding (281) 476-1814 Central Campus
Welding (281) 459-7343 North Campus
sanjac.edu/Welding

Inspection (281) 478-2799
sanjac.edu/NDT

Schoolcraft College

Located in one of the largest manufacturing areas of the USA, Schoolcraft College offers certificates and Associates Degrees in an AWS accredited test facility (ATF). The college provides state of the art welding and fabrication equipment in an innovative, dynamic and productive environment. Small class size give easy access for students to knowledgeable industry trained experts and CWI instructors who strive to educate students for real life, on the job scenarios. Schoolcraft College offers classes in all major welding processes as well as specialized classes in blueprint reading, inspection, metallurgy, OSHA 30, CAD, CNC manufacturing and metal sculpture. Schoolcraft College also offers courses for AWS certifications in aerospace, ASME, D1.1, B2.1 and several other codes and standard to enrolled students as well as local skilled tradesmen and tradeswomen.

18600 Haggerty Road
Livonia, MI 48152
(734) 462-4400 ext. 5176
Coley McLean
cmclean@schoolcraft.edu

Southcoast Welding Institute

Southcoast Welding Institute offers courses in FCAW, GMAW, GMAW 5XXX, GTAW, and GTAW Pipe. Students have the ability to earn a certificate of completion for the courses. The courses are designed to serve any individual skill level. It is Southcoast Welding Institute's endeavor to facilitate classroom theory and hands on training to successfully accomplish vocational goals. No more than 20 students are able to take a course at a time.

2591 Faivre St. #1
Chula Vista, CA 91911
info@southcoastwelding.net

Tyler Junior College

Tyler Junior College (TJC) is a comprehensive community college in Tyler, Texas, recognized as one of the top colleges in Texas! Its one-year certificate and two-year associate degree pathways in welding technology prepare students for entry-level code welding for industry. Training is provided in blueprint reading and layout as well as SMAW, GMAW, FCAW, GTAW and pipe welding. In addition, the welding program follows the AWS SENSE entry level guidelines for welder training. Many TJC welding graduates secure a great job before graduation. Let us help you prepare for a rewarding career in a high-demand field. Call 1-800-687-5680 or visit our website.

P.O. Box 9020
Tyler, TX 75711
(903) 510-2390
or (800) 687-5680
tjc.edu

St. Charles Community College

St. Charles Community College (SCC) is a two-year community college offering three certificates and a two-year AAS Welding degree, all stackable credentials. This semester-based AWS SENSE program teaches SMAW, GTAW, GMAW, FCAW and oxyfuel in order to provide graduates with the skills they need to go to work immediately. Students receive hands-on instruction from industry professionals. SCC has industry partners willing to hire graduates immediately for this rewarding career.

Scott Kearns
Welding Program Coordinator
4601 Mid Rivers Mall Drive
Cottleville, MO 63376
(636) 922-8667
welding@stchas.edu

United Technical, Inc.

Become an AWS Certified Welder and/or AWS Certified in Magnetic Particle (MT), Liquid Penetrant (PT)

- Welding Academy
- Inspection Academy
- Nondestructive Testing (NDT) Training
- Accredited AWS NDE Testing Site
- Accredited AWS Welder Testing Facility (ATF)
- Accredited A2LA Laboratory Testing Services

Train, test and become either an AWS Certified Welder or NDT Inspector

- Corporate training for certified welders or NDT inspectors
- Laboratory Testing - Certified Testing Lab for PQR or Materials Testing
- ASNT ACCP NDT Level III Services
- On-Site Inspections
- On-Site Training

United Technical knows how to support manufacturing companies.

1081 E. North Territorial Road
Whitmore Lake, MI 48189
(248) 667-9185 • rdines@unitedtech1.com

American Welding Society®

aws.org

BRING BRAND AWARENESS TO YOUR COMPANY

By placing your product video on the AWS website.

Contact AWS for more information at mediasales@aws.org

Advertising contacts:

Jeff Rhodes at 410-316-9861

Kim Daniele at 410-316-9862

Errata
D1.2

The following errata have been identified and will be incorporated into the next reprinting of the following document.

AWS Standard: D1.2/D1.2M:2014, *Structural Welding Code — Aluminum*

p. xi, Table of Contents: Delete line "Foreword ... 179."

p. 67, 4.6: Change "A gas or gas mixture used for shielding shall comply with AWS A5.32/A5.32M, Specification for Welding Shielding Gases)" to "A gas or gas mixture used for shielding shall comply with AWS A5.32/ A5.32M, Welding Consumables — Gases and Gas Mixtures for Fusion Welding and Allied Processes."

p. 71, 4.21.5: Change "in conformance with 4.20" to "in conformance with 4.24."

p. 78, Figure 4.2: Change "TABLE 4.6" to "TABLE 5.3."

p. 81, 5.7.2: Change "in conformance with 4.21" to "in conformance with 4.24."

p. 84, 5.11: Change "in conformance with 4.21" to "in conformance with 4.24."

pp. 106–111, Clause 7: Change page header from "CLAUSE 7. STRENGTHENING AND REPAIR OF EXISTING STRUCTURES" to "CLAUSE 7. FRICTION STIR WELDING."

p. 174, Annex I: Change page header from "ANNEX K" to "ANNEX I."

p. 176, Annex J: Change page header from "ANNEX L" to "ANNEX J."

p. 210, Index: Change "Repairs, 4.21 & 4.21.5" to "Repairs, 4.24."

p. 210, Index: Change "Repairs,... of welds, 4.21.5" to "Repairs, ... of welds, 4.24.5."

fischer®

American Welding Society

SPRAYTIME® Puts the Spotlight on Thermal Spray

SPRAYTIME®, published by the International Thermal Spray Association, a Standing Committee of the American Welding Society, is the flagship international magazine for the thermal spray community.

Assembled on a quarterly basis, issues feature industry news, products, articles, and more. To view the current magazine, visit thermalspray.org/spraytime/.

In addition, if you've got an article idea or a press release in relation to thermal spray, contact Editor Cindy Weihl at *cweihl@aws.org* or *spraytime@thermalspray.org*.

AWS MEMBERSHIP APPLICATION

Join or Renew: **Mail:** Form with your payment, to AWS **Call:** Membership Department at (800) 443-9353, ext. 480
Fax: Completed form to (305) 443-5647 **Online:** www.aws.org/membership

American Welding Society
8669 NW 36 St, # 130
Miami, FL 33166-6672
Telephone (800) 443-9353
FAX (305) 443-5647
Visit our website: www.aws.org

CONTACT INFORMATION

❑ New Member ❑ Renewal

❑ Mr. ❑ Ms. ❑ Mrs. ❑ Dr. Please print • Duplicate this page as needed

Last Name:_____

First Name:_____ M.I:_____

Birthdate:_____ E-Mail:_____

Cell Phone ( )_____ Secondary Phone ( )_____

Were you ever an AWS Member? ❑ YES ❑ NO If "YES," give year_____ and Member #:_____

Company (if applicable):_____

Mailing Address:_____

_____

City:_____ State/Province:_____

Zip/PostalCode:_____ Country:_____

❶ Who pays your dues?: ❑ Company ❑ Self-paid ❷ Sex: ❑ Male ❑ Female
❸ Education level: ❑ High school diploma ❑ Associate's ❑ Bachelor's ❑ Master's ❑ Doctoral

❑ Check here if you learned of the Society through an AWS Member? Member's name:_____ Member's # (if known):_____
❑ Check here if you would prefer not to receive email updates on AWS programs, new Member benefits, savings opportunities and events.

INDIVIDUAL MEMBERSHIP

➔ Please check each box that applies to the Membership or service you'd like, and then add the cost together to get your Total Payment.

❑ **AWS INDIVIDUAL MEMBERSHIP (One Year)**.....$88

❑ **AWS INDIVIDUAL MEMBERSHIP (Two Years) SAVE $25** *New Members Only*.....$151

❑ New Member Initiation Fee $12

OPTIONS AVAILABLE TO AWS INDIVIDUAL MEMBERS ONLY:

A.) OPTIONAL **Book Selection** (Choose from 12+ titles; up to a $192 value; includes shipping & handling)

❑ Individual Members in the U.S.....$35

❑ Individual Members outside the U.S (includes International shipping).....$85

ONLY ONE SELECTION PLEASE. **For more book choices visit https://app.aws.org/membership/books**

❑ *Jefferson's Welding Encyc.*(CD-ROM only) ❑ *Welding Metallurgy* ❑ *Welding Inspection Handbook*

Welding Handbook Selections: ❑ *WHB* (9th Ed., Vol. 5) ❑ *WHB* (9th Ed., Vol. 4) ❑ *WHB* (9th Ed., Vol. 3) ❑ *WHB* (9th Ed., Vol. 2) ❑ *WH* (9th Ed., Vol. 1)

B.) OPTIONAL ***Welding Journal* Hard Copy** (for Members outside North America)

❑ Individual Members outside North America (note: electronic delivery of WJ is standard).....$50

INDIVIDUAL MEMBERSHIP TOTAL PAYMENT.....$_____

NOTE: Dues include $17.30 for *Welding Journal* subscription and $4.00 for the AWS Foundation.

STUDENT MEMBERSHIP

❑ **AWS STUDENT MEMBERSHIP (with digital *Welding Journal* magazine)**.....$15

❑ **AWS STUDENT MEMBERSHIP (with hard copy *Welding Journal* magazine)**.....$35

Option available only to students in U.S., Canada & Mexico.

PAYMENT INFORMATION

Payment can be made (in U.S. dollars) by check or money order (international or foreign), payable to the American Welding Society, or by credit card.

❑ Check ❑ Money Order ❑ AMEX ❑ Diners Club ❑ MasterCard ❑ Visa ❑ Discover ❑ Other

CC#:_____ / _____ / _____ / _____ Expiration Date (mm/yy) _____ / _____

Signature of Applicant:_____ Application Date:_____

OFFICE USE ONLY Check #:_____ Account #_____
Source Code: IT Date:_____ Amount:_____

REV. 11/18

Type of Business (Check ONE only)

A ❑ Contract construction
B ❑ Chemicals & allied products
C ❑ Petroleum & coal industries
D ❑ Primary metal industries
E ❑ Fabricated metal products
F ❑ Machinery except elect. (incl. gas welding)
G ❑ Electrical equip., supplies, electrodes
H ❑ Transportation equip. — air, aerospace
I ❑ Transportation equip. — automotive
J ❑ Transportation equip. — boats, ships
K ❑ Transportation equip. — railroad
L ❑ Utilities
M ❑ Welding distributors & retail trade
N ❑ Misc. repair services (incl. welding shops)
O ❑ Educational Services (univ., libraries, schools)
P ❑ Engineering & architectural services (incl. assns.)
Q ❑ Misc. business services (incl. commercial labs)
R ❑ Government (federal, state, local)
S ❑ Other

Job Classification (Check ONE only)

01 ❑ President, owner, partner, officer
02 ❑ Manager, director, superintendent (or assistant)
03 ❑ Sales
04 ❑ Purchasing
05 ❑ Engineer — welding
20 ❑ Engineer — design
21 ❑ Engineer — manufacturing
06 ❑ Engineer — other
10 ❑ Architect designer
12 ❑ Metallurgist
13 ❑ Research & development
22 ❑ Quality control
07 ❑ Inspector, tester
08 ❑ Supervisor, foreman
14 ❑ Technician
09 ❑ Welder, welding or cutting operator
11 ❑ Consultant
15 ❑ Educator
17 ❑ Librarian
16 ❑ Student
18 ❑ Customer Service
19 ❑ Other

Technical Interests (Check all that apply)

A ❑ Ferrous metals
B ❑ Aluminum
C ❑ Nonferrous metals except aluminum
D ❑ Advanced materials/Intermetallics
E ❑ Ceramics
F ❑ High energy beam processes
G ❑ Arc welding
H ❑ Brazing and soldering
I ❑ Resistance welding
J ❑ Thermal spray
K ❑ Cutting
L ❑ NDT
M ❑ Safety and health
N ❑ Bending and shearing
O ❑ Roll forming
P ❑ Stamping and punching
Q ❑ Aerospace
R ❑ Automotive
S ❑ Machinery
T ❑ Marine
U ❑ Piping and tubing
V ❑ Pressure vessels and tanks
W ❑ Sheet metal
X ❑ Structures
Y ❑ Other
Z ❑ Automation
1 ❑ Robotics
2 ❑ Computerization of Welding

Mark Your Calendar

AMPM2019 Additive Manufacturing with Powder Metallurgy

June 23–26. Sheraton Grand, Phoenix, Ariz. This event brings together industry professionals and decision makers from around the world to network and learn from each other about the latest developments and innovations in metal powder technology. The conferences address powder metallurgy parts and products, metal injection molding, and metal additive manufacturing. Visit *ampm2019.org*.

ASNT Digital Imaging and Ultrasonics for NDT 2019 Conference

July 23–25. Harrah's New Orleans, New Orleans, La. This conference will feature more than 60 presentations and 20 exhibitors, plus numerous networking opportunities. Visit *asnt.org*.

ASNT Refresher Courses — Summer 2019

Aug. 5–28. Courtyard Columbus Worthington, Columbus, Ohio. The ASNT refresher courses are considered Level III courses and are designed for those who are currently Level II or III and are looking to become an ASNT Level III or to maintain their Level III status. Visit *asnt.org*.

ASNT Annual Conference 2019

Nov. 18–21. Westgate Las Vegas Resort & Casino, Las Vegas, Nev. This conference will provide a forum for the exchange of theoretical, scientific, and application information. Featuring more than 85 h of technical presentations, a 200-plus exhibitor trade show, and networking opportunities, visitors will be informed and up to date on the latest advances in nondestructive examination (NDE) technology. Industry topics to be covered include composites, NDE 4.0, aerospace, chemical and petroleum, structural health monitoring, ultrasonics, railroads, infrastructure, maritime, and more. Visit *asnt.org*.

Inspection Conference 2020

Jan. 21–23, 2020. Houston, Tex. Experts from the American Welding Society, American Institute of Steel Construction, The American Society for Nondestructive Testing, and NACE International (The Corrosion Society) join forces on a comprehensive array of topics common to corrosion engineering, nondestructive examination, steel construction, and welding inspectors. Learn tips, technology, and resources to improve the quality of your plans, drawings and documentation, visual inspections, procedures, and testing processes. Visit *aws.org*.

Educational Opportunities

ASME Section IX Seminar

Learn how to use ASME Section IX quickly and cost effectively. This three-day, ASME-sponsored course is scheduled for Houston, Tex., June 10–12. Contact Marion Hess, *hessm@asme.org*, (212) 591-7161, or register at *asme.org/products/courses/bpv-code-section-ix-welding-brazing-fusing*.

The Atlas of Welding Procedure Specifications Practical Welding Metallurgy

These three-day seminars address the needs of welders, inspectors, and engineers who are advancing their careers to the next level of proficiency. The Atlas of Welding Procedure Specifications seminar provides a rational basis for developing welding procedure specifications that meet AWS, ASME codes, and military standards. Practical Welding Metallurgy seminar provides a practical approach to determine how to weld metals based on sound metallurgical principles. The focus is on ferrous metals with coverage of aluminum alloys and reactive metals. The workshop/seminars are scheduled for September and October 2019 in Simsbury, Conn. Seating is limited, so register early. For more information, contact Albert Moore at *amoore999@comcast.net*.

AWS Online CWI Pre-Seminar

The online CWI Pre-Seminar covers fundamental concepts and principles frequently used by CWIs. The ten-course program has been thoughtfully engineered to provide a strong foundation for those who are preparing to take the CWI exam or as a refresher for accomplished CWIs in need of professional development hours (PDHs). Visit *aws.org*.

Brazing Training Seminar

Learn how to properly understand and apply brazing principles to reduce problems in your production shop and improve your brazing productivity in this three-day brazing training program on May 14–16 in Los Angeles, Calif. Contact Dan Kay at *dan.kay@kaybrazing.com*, or go to *kaybrazing.com/seminars.html*.

CWB Online/Classroom Courses

Courses in NDE disciplines to meet certifications to Canadian General Standards Board or Canadian Nuclear Safety Commission. The Canadian Welding Bureau; (800) 844-6790; *cwbgroup.org*; *info@cwbgroup.org*.

CWI Exam Prep Course

American Institute of Nondestructive Testing offers a 40-h online CWI exam prep course. Part A covers the fundamentals of welding technology; part B consists of extensive practical hands-on techniques and will be held at the Houston Marriott North in Houston, Tex.; and part C provides in-depth training to the welding code portion of the exam. Contact Jeff LeTourneau, *instructor@trainingndt.com*, (855) 313-0325, or visit *trainingndt.com*.

CWI/CWE Course and Exam

A ten-day program presented in Troy, Ohio. Contact Hobart Institute of Welding Technology, (800) 332-9448; *hiwt@welding.org*; *welding.org*.

— continued on page 37

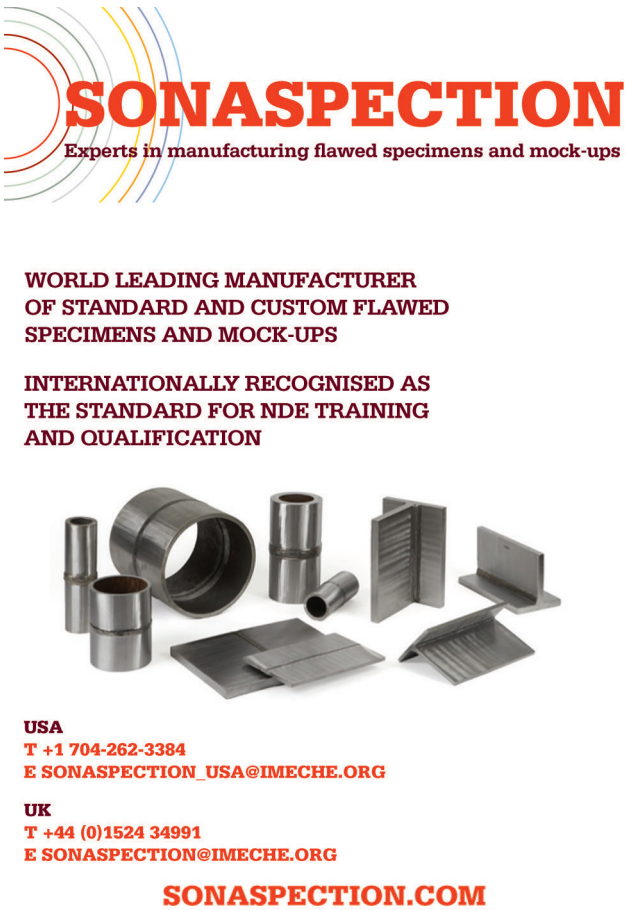

Certification Schedule

Note: The 2019 schedule for all certifications is posted online at *aws.org/w/a/registrations/prices_schedules.html.*

Certified Welding Inspector (CWI)

Location	Seminar Dates	Exam Date
Baton Rouge, LA	May 5–10	May 11
Detroit, MI	May 5–10	May 11
Denver, CO	May 19–24	May 25
Nashville, TN	May 19–24	May 25
Birmingham, AL	June 2–7	June 8
Kansas City, MO	June 2–7	June 8
Pittsburgh, PA	June 9–14	June 15
Spokane, WA	June 9–14	June 15
Beaumont, TX	June 16–21	June 22
Hartford, CT	June 16–21	June 22
Newark, NJ	June 23–28	June 29
Omaha, NE	June 23–28	June 29
Louisville, KY	July 7–12	July 13
Phoenix, AZ	July 7–12	July 13
Norfolk, VA	July 14–19	July 20
Milwaukee, WI	July 21–26	July 27
Orlando, FL	July 21–26	July 27
Cleveland, OH	July 28–Aug. 2	Aug. 3
Los Angeles, CA	July 28–Aug. 2	Aug. 3
Denver, CO	Aug. 4–9	Aug. 10
Philadelphia, PA	Aug. 4–9	Aug. 10
Chicago, IL	Aug. 11–16	Aug. 17
San Diego, CA	Aug. 11–16	Aug. 17
Salt Lake City, UT	Aug. 11–16	Aug. 17
Charlotte, NC	Aug. 18–23	Aug. 24
Sacramento, CA	Aug. 18–23	Aug. 24
Houston, TX	Aug. 25–30	Aug. 31
Seattle, WA	Aug. 25–30	Aug. 31
Minneapolis, MN	Sept. 8–13	Sept. 14
San Francisco, CA	Sept. 8–13	Sept. 14
Nashville, TN	Sept. 15–20	Sept. 21
San Antonio, TX	Sept. 15–20	Sept. 21
Boston, MA	Sept. 22–27	Sept. 28
New Orleans, LA	Sept. 22–27	Sept. 28
Indianapolis, IN	Sept. 29–Oct. 4	Oct. 5
Miami, FL	Sept. 29–Oct. 4	Oct. 5
Long Beach, CA	Oct. 6–11	Oct. 12
Tulsa, OK	Oct. 6–11	Oct. 12
Detroit, MI	Oct. 13–18	Oct. 19
Houston, TX	Oct. 13–18	Oct. 19
Atlanta, GA	Oct. 20–25	Oct. 26
Cleveland, OH	Oct. 20–25	Oct. 26
Kansas City, MO	Oct. 27–Nov. 1	Nov. 2
Pittsburgh, PA	Oct. 27–Nov. 1	Nov. 2
Dallas, TX	Nov. 3–8	Nov. 9
Reno, NV	Nov. 3–8	Nov. 9
Sacramento, CA	Nov. 10–15	Nov. 16
Syracuse, NY	Nov. 10–15	Nov. 16
Roanoke, VA	Nov. 17–22	Nov. 23
Waco, TX	Nov. 17–22	Nov. 23

9-Year Recertification Seminar for CWI/SCWI

For current CWIs and SCWIs needing to meet education requirements without taking the exam. The exam can be taken at any site listed under Certified Welding Inspector.

Location	Seminar Dates
Denver, CO	May 5–10
Miami, FL	May 19–24
Pittsburgh, PA	June 23–28
Charlotte, NC	July 21–26
Houston, TX	Aug. 4–9
Orlando, FL	Aug. 25–30
Sacramento, CA	Sept. 22–27
Dallas, TX	Oct. 6–11
Denver, CO	Oct. 20–25
Miami, FL	Nov. 3–8
New Orleans, LA	Nov. 17–22

Certified Welding Educator (CWE)

Seminar and exam are given at all sites listed under CWI. Seminar attendees will not attend the Code Clinic portion of the seminar (usually the first two days).

Certified Welding Sales Rep. (CWSR)

Prometric testing centers. More information at *aws.org/certification/detail/certified-welding-sales-representative.*

Certified Welding Supervisor (CWS)

Prometric testing centers. More information at *aws.org/certification/detail/certified-welding-supervisor.*

Certified Radiographic Interpreter (CRI)

The CRI certification can be a stand-alone credential or can exempt you from your next 9-Year Recertification. More information at *aws.org/certification/detail/certified-radiographic-interpreter*.

Location	Seminar Dates	Exam Date
Las Vegas, NV	June 3–7	June 8
Pittsburgh, PA	July 29–Aug. 2	Aug. 3
Houston, TX	Sept. 30–Oct. 4	Oct. 5

Certified Robotic Arc Welding (CRAW)

OTC Daihen Inc., Tipp City, OH; (937) 667-0800, ext. 218
Lincoln Electric Co., Cleveland, OH; (216) 383-4723
Wolf Robotics, Fort Collins, CO; (970) 225-7667
Milwaukee Area Technical College, Milwaukee, WI; (414) 456-5454
College of the Canyons, Santa Clarita, CA; (651) 259-7800
Ogden-Weber Applied Technology College, Ogden, UT; (800) 627-8448

IMPORTANT: *This schedule is subject to change without notice. Please verify your event dates with the Certification Dept. to confirm your course status before making travel plans. Applications are to be received at least six weeks prior to the seminar/exam or exam. Applications received after that time will be assessed a $250 Fast Track fee. Please verify application deadline dates by visiting our website* aws.org/certification/docs/schedules.html. *For information on AWS seminars and certification programs, or to register online, visit* aws.org/certification *or call (800/305) 443-9353, ext. 273, for Certification; or ext. 455 for Seminars.*

Mark Your Calendar

— continued from page 35

CWI/CWS Inspector Training

Welder Training & Testing Institute is hosting the following endorsement and CWI/CWS prep course seminars: ASME Section IX/B31.1/B31.3: May 9, 10; Aug. 1, 2; and Nov. 21, 22; D1.1/D1.5/API Endorsement: May 16, Aug. 8, and Dec. 5; CWI: May 13–18, Aug. 5–10, and Dec. 2–7; CWS: Sept. 16–20. To register, go to *wtti.com*.

E-Courses in Destructive and Nondestructive Testing of Welds and Other Welding-Related Topics

Online video courses taken at one's own pace offer certificates of completion and continuing education units. Hobart Institute of Welding Technology, (800) 332-9448; *welding.org/product-category/online-courses/*.

NDE Classes

Moraine Valley Community College, Palos Hills, Ill., offers NDE classes in PT, MT, UT, RT, radiation safety, and eddy current, as well as API 510 exam prep and weld inspection. (708) 974-5735; *ccce@morainevalley.edu*; *morainevalley.edu*.

NDT Classroom Training and e-Learning Course

Offers courses in UT, RT, MT, PT, eddy current, and remote visual inspection. Onsite training also available. (855) 232-7470; *geinspectionacademy.com*; *inspection.academy@ge.com*.

NDT Courses and Exams

Brea, Calif., and customers' locations. Level I, II, and III refresher courses in PA, UT, MP, radiation safety, radiography, visual, etc. Test NDT LLC; (714) 255-1500; *testndt.com*.

American Welding Society

Can We Talk?

The Welding Journal staff encourages an exchange of ideas with you, our readers. If you'd like to ask a question, share an idea, or voice an opinion, you can call, write, email, or fax. Staff email addresses are listed below, along with a guide to help you interact with the right person.

Publisher/Editor
Mary Ruth Johnsen, mjohnsen@aws.org, ext. 238
General Management, Reprint Permission, Copyright Issues, Editorial Content

Sr. Editor
Cindy Weihl, cweihl@aws.org, ext. 256
Section News, SPRAYTIME®

Features Editor
Kristin Campbell, kcampbell@aws.org, ext. 257
Feature Articles, Industry News

Associate Editor
Katie Pacheco, kpacheco@aws.org, ext. 275
Society News, New Products

Assistant Editor
Roline Pascal, rpascal@aws.org, ext. 303
International News, Personnel

Production Manager
Zaida Chavez, zaida@aws.org, ext. 265
Design and Production

Editor of Inspection Trends/Editor of Welding Journal en Español/Manager of Electronic Media
Carlos Guzman, cguzman@aws.org, ext. 348
Inspection Trends, Spanish-Language Content, Design and Production

Advertising
Jeff Rhodes jeff.rhodes@mci-group.com and Kim Daniele kim.daniele@mci-group.com

Subscriptions
Thomas Lira, tlira@aws.org, ext. 351
Subscriptions Representative

Welding Journal Dept.
8669 NW 36 St., #130
Miami, FL 33166

Classified Ads

95 FIRST STREET
P.O. BOX 868
BRIDGEWATER, MA 02324

TELEPHONE 508-697-6068
FAX 508-697-6154
CELL 781-727-1446

A B C Testing Inc.

WWW.ABCNDT.COM

SERVICES: ULTRASONIC•RADIOGRAPHIC • MAGNETIC PARTICLE • LIQUID PENETRANT • EDDY CURRENT • VISUAL • LEAK TESTING • MECHANICAL • WELDER/WELDING PROCEDURE QUALIFICATION •POSITIVE MATERIAL INDENTIFICATION • HYDROSTATIC • GROUND PENETRATING RADAR

BRUCE RICHARDSON
President
bruce.richardson@abcndt.com

CWI 94050641
LEVEL III, 22385
NY DOT–ULTRASONIC

American Welding Society

Follow AWS on Social Media

facebook.com/americanweldingsociety
Instagram: *@americanweldingsociety*
Twitter: *@AWSHQ*

Practical Welding Metallurgy and the Atlas of Welding Procedure Specifications

These three-day seminars address the needs of welders, inspectors, and engineers that are advancing their careers to the next level of proficiency.

Practical Welding Metallurgy is a new seminar developed to provide the attendee a better understanding of what happens to a piece of metal when it is subjected to heating and cooling cycles while being welded. Finally, a seminar that answers many of the common questions that come up when welding steel structures, repairing tool steel, repairing machines constructed of cast steel, or controlling distortion. Ultimately, how does one predict the microstructure of the base metal during and after welding? This is the seminar that will answer those questions.

The Atlas of Welding Procedure Specifications provides a rational basis for developing welding procedure specifications that meet AWS, ASME codes and military standards. Practical Welding Metallurgy provides a practical approach to determine how to weld metals based on sound metallurgical principles. The focus is on ferrous metals with coverage of aluminum alloys and reactive metals.

The three-day workshop/seminars are scheduled for September and October 2019 in Simsbury, Connecticut. Albert Moore is the point of contact and the instructor for the seminars. Seating is limited, so register early.
For more information about the seminars contact Albert Moore at **amoore999@comcast.net.**

Advertiser Index

Atlas API Training, LLC 34
atlasapitraining.com ..... (409) 527-2699

Atlas Evaluation & Inspection Services (AEIS) 35
indt.com ..... (732) 388-7711

AWS Conferences 2
aws.org/events/conferences

AWS Member Services 5, 11
aws.org/membership ..... (800) 443-9353, ext. 480

Fabtech ..... IBC

Fischer Technology 32
fischer-technology.com ..... (860) 683-0781

FlawTech Inc. 34
flawtech.com ..... (704) 795-4401

G. A. L. Gage Company 6
galgage.com ..... (269) 465-5750

Gradient Lens Corp. 9
gradientlens.com ..... (800) 536-0790

Hobart Institute of Welding Technology 6
welding.org ..... (937) 332-9500

NDT Classroom 10
ndtclassroom.com/aws ..... (716) 812-8165

NDT Seals Inc. 7
ndtseals.com ..... (800) 261-6261

Olympus Corp. ..... OBC
olympus-ims.com/scanners ..... (281) 922-9300

Sonaspection 35
sonaspection.com ..... (704) 262-3384

Test Equipment Distributors 7
tedndt.com ..... (800) 962-1788

NDE School Profiles 24-30

IFC - Inside Front Cover
IBC - Inside Back Cover
OBC - Outside Back Cover

FABTECH 2019
CHICAGO
NOV 11-14

REGISTER TODAY
FABTECHEXPO.COM

FABRICATING
TUBE & PIPE
STAMPING
FINISHING
WELDING
BENDING & FORMING
LASERS
CUTTING
AUTOMATION
ASSEMBLY
TOOL & DIE
PUNCHING
ROBOTICS
WATERJET
SAWS
ADDITIVE MFG
PRESS BRAKES
COIL PROCESSING

TECHNOLOGY & INNOVATION TO
TRANSFORM
YOUR BUSINESS

FABTECH

NORTH AMERICA'S LARGEST METAL FORMING, FABRICATING, WELDING AND FINISHING EVENT

AWS FMA sme PMA ai

Thank You to Our Platinum Sponsors

AMADA
BLM GROUP USA
MITSUBISHI LASER
TRUMPF

OLYMPUS®

FlexoFORM™ Pipe Elbow Inspection Solution

- 100% elbow coverage
- Intuitive 2D C-scan imaging
- High-resolution data (1 mm × 1 mm)
- Fast elbow wall thickness measurement

Olympus offers rental equipment in the US.
Call us 24/7 at (281) 922-9300 for more information.

www.olympus-ims.com/scanners

Olympus is a registered trademark, and FlexoFORM is a trademark of Olympus Corporation.